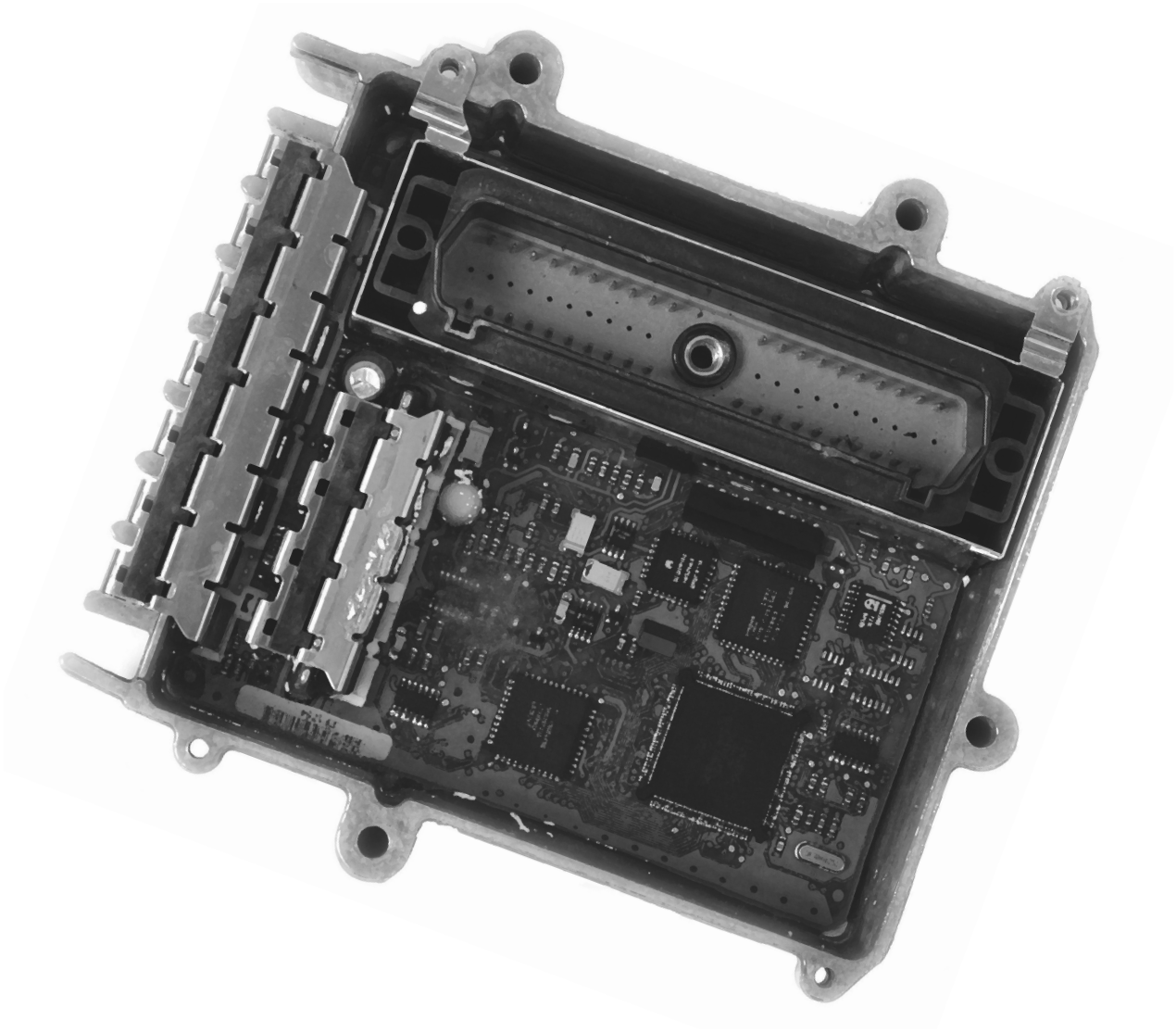

CARCHIPCARE
https://carchipcare.com
+91 9269969060

CARCHIPCARE
https://carchipcare.com
+91 9269969060

TABLE OF CONTENTS

INTRODUCTION **1**
COURSE OBJECTIVES **1**
ACRONYMS **2**
LESSON 1 ELECTRONIC CONTROL MODULE **5**
INTRODUCTION TO VEHICLE MODULES 5
Single Module Systems 5
Multiple Module Systems 6
INTERNAL MODULE COMPONENTS 7
Central Processing Unit 7
Voltage Regulators 8
Input Signal Processing 8
Analog vs. Digital Signals 9
Analog-to-Digital Conversion 10
Digital-to-Analog Conversion 11
CPU Memory 12
Internal Clock 13
Module Self Diagnosis 13
Diagnostic Circuit 14
OUTPUT CONTROLS 15
Low-Side Drivers 15
High-Side Drivers 16
Pulse Width Modulation 17
Duty Cycle 18
POWER SUPPLIES AND GROUNDS 19
Battery Power 19
Ignition Feed 19
Battery Ground 19
Sensor Ground 19
Network Communication Circuits 21
LESSON 2 MODULE INPUTS **23**
MODULE INPUTS 23
SWITCHES 23
Switch Inputs 23
Ground-Side Switches 24
Power-Side Switches 25
Two-State Pressure Switches 27
Reed Switches 28

CARCHIPCARE
https://carchipcare.com
+91 9269969060

Resistive Multiplexed Switches....31
Position Switches....32
Multi-Position Switches....33
Hall-Effect Sensors....34
SENSORS....37
Two-Wire Sensors....37
Magneto-Resistive Sensors....41
Three-Wire Sensors....43
Voltage Generating Sensors....45
PHOTO SENSORS....49
Photo Sensors Symbols....49
Photocell....50
LESSON 3 MODULE OUTPUTS....53
OUTPUT CONTROLS....53
Mechanical Relays....54
Diodes....57
TRANSISTORS....61
NPN and PNP Transistors....62
Bipolar Transistor....63
CAPACITORS....64
OUTPUT (LOAD) DEVICES....65
Lamps....65
Motors....68
Stepper Motors....73
Servo Motors....74
COILS....75
A/C Compressor Clutch Coil....75
Ignition Coils....76
HEATING ELEMENTS....78
Heated Seats....79
Auxiliary Cabin Heater....81
Oxygen Sensor Heater Circuit....82
GLOSSARY....85

CARCHIPCARE
https://carchipcare.com
+91 9269969060

Notes:

CARCHIPCARE
https://carchipcare.com
+91 9269969060

Notes:

CARCHIPCARE
https://carchipcare.com
+91 9269969060

INTRODUCTION

This two-day instructor-led training course is intended to provide the Level 2 technician with the skills necessary to perform diagnostics on complex electronic control systems. Concepts are explained for the understanding of electrical systems.

Electronic control systems include:

- Vehicle control modules
- Electronic control system components
- Switches and sensors

A required Phase 2 WBT covers the operation and diagnosis of Starting and Charging systems.

Service information procedures and the use of special tools are emphasized to help increase productivity when returning to the dealership.

Use the information provided in this publication with the latest service information when performing vehicle services.

Upon completion of this course, you must log into Perception to complete the review test to receive credit for the course.

In addition to this Introduction, this course includes the following lessons:

- Lesson 1 - Electronic Control Modules
- Lesson 2 - Module Inputs
- Lesson 3 - Module Outputs

COURSE OBJECTIVES

After completing this course, you will be able to:

- Describe the logic flow of single and multiple module systems
- Identify power-side and ground-side switched input circuits
- Identify the types of diodes and describe their operation in an electronic circuit
- Identify the types of transistors and describe their operation in an electronic circuit
- Diagnose and describe the operation of power-side and ground side switched circuits using electrical test equipment
- Diagnose two-wire and three-wire sensor circuits using electrical test equipment
- Diagnose optical sensors and related circuits using electrical test equipment
- Diagnose diodes, transistors, relays, and computer-controlled output devices using electrical test equipment

CARCHIPCARE
https://carchipcare.com
+91 9269969060

ACRONYMS

The following is a list of acronyms used throughout this publication:

- A/D Analog-to-digital
- ABM Antilock Brake Module
- ABS Antilock Brake System
- AC Alternating Current
- A/C Air Conditioning
- BCM Body Control Module
- CAN Controller Area Network
- CCN Cabin Compartment Node
- CEMF Counter Electro-motive Force
- CPU Central Processing Unit
- D/A Digital-to-analog
- DC Direct Current
- DRL Daytime Running Lamps
- DTC Diagnostic Trouble Code
- ECM Electronic Control Module
- ECT Engine Coolant Temperature
- EEPROM Electronically Erasable Programmable Read Only Memory
- EGR Exhaust Gas Recirculation
- EMI Electromagnetic Induction
- ESP Electronic Stability Program
- FCM Front Control Module
- FET Field-effect Transistor
- FM Frequency modulation
- HEV Hybrid Electric Vehicle
- HSD High-side Driver
- HVAC Heating, Ventilation, and Air Conditioning
- HZ Hertz (cycles / second)
- IAC Intake Air Control
- IPM Integrated Power Module
- LED Light-emitting Diode

CARCHIPCARE
https://carchipcare.com
+91 9269969060

- LIN Local Interconnect Network
- LSD Low-side Driver
- MAP Manifold Absolute Pressure
- MDS Multiple Displacement System
- MIL Malfunction Indicator Lamp
- MUX Resistive Multiplexed
- NTC Negative Temperature Coefficient
- O2 Oxygen
- OCM Occupant Classification Module
- OCS Occupant Classification System
- PCI Programmable Communication Interface
- PCM Powertrain Control Module
- PTC Positive Temperature Coefficient
- PWM Pulse Width Modulation
- RAM Random Access Memory
- RFI Radio Frequency Interference
- ROM Read Only Memory
- SCCM Steering Column Control Module
- TCM Transmission Control Module
- TIP Throttle Input Sensor
- TPS Throttle Position Sensor

CARCHIPCARE
https://carchipcare.com
+91 9269969060

Notes:

CARCHIPCARE
https://carchipcare.com
+91 9269969060

LESSON 1 ELECTRONIC CONTROL MODULE

INTRODUCTION TO VEHICLE MODULES

Electronic control modules used in today's vehicles are on-board computers performing various functions to operate the numerous systems within the vehicle. Some late model vehicles are equipped with over 30 modules. Although they have different responsibilities and may look different, they perform the functions of controlling vehicle operation in the same way.

Single Module Systems

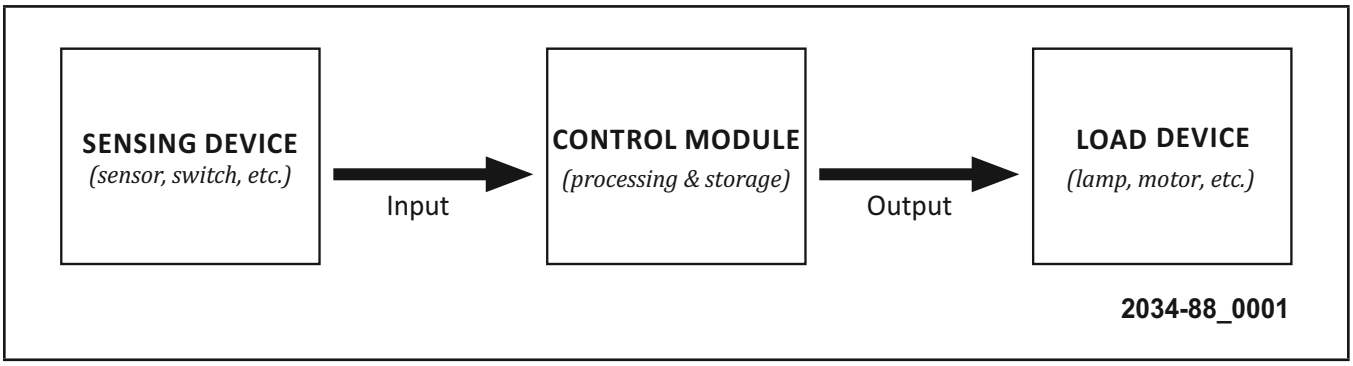

Figure 1 Single Module System

For an electronic control module to do its job properly, it must gather accurate and reliable data from different input devices, such as sensors or switches. After the module has this information, it can follow its pre-programmed instructions to process this information. After a decision has been made, the module acts to turn a device on or off, or display information.

CARCHIPCARE
https://carchipcare.com
+91 9269969060

Multiple Module Systems

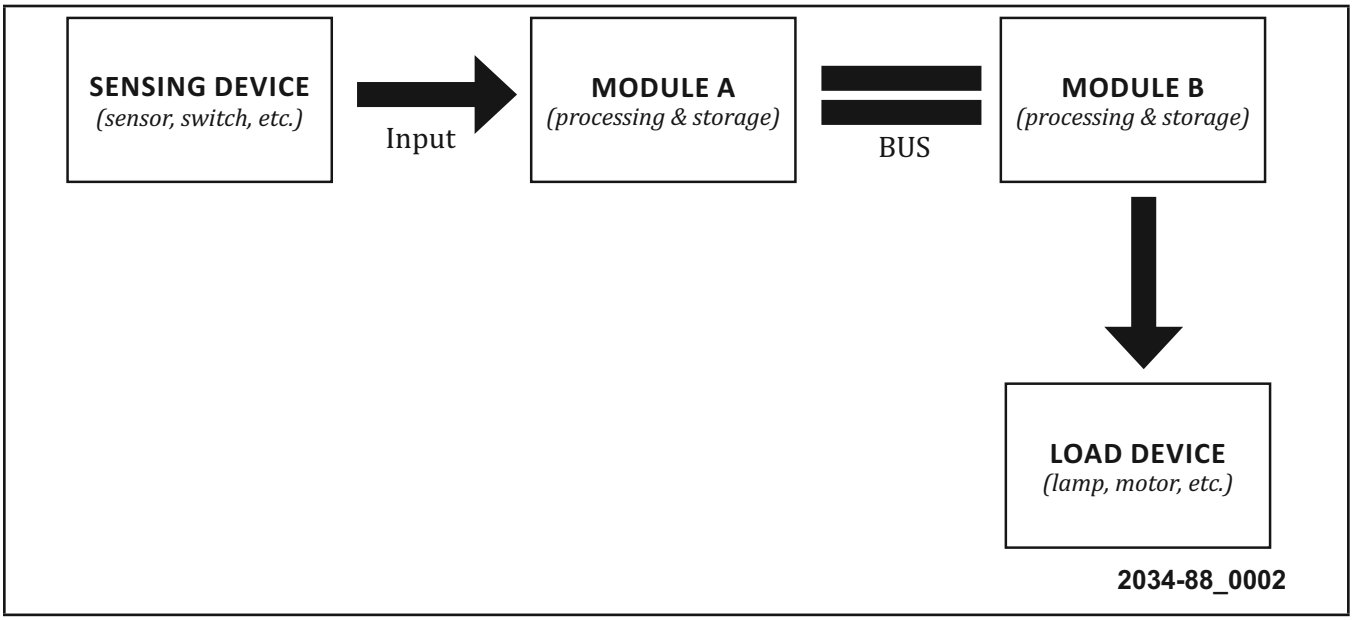

Figure 2 Multiple Module Systems

With the advent of bus communication networks, all computers are able to share information with each other across a single-wire (local interconnect network [LIN] and programmable communication interface [PCI] bus) or a two-wire controller area network (CAN) bus. There are many advantages to BUS networks, such as reduce wiring complexity of the vehicle, smaller gauge wiring due to reduced current load, and a reduction in the number of input devices (sensors) needed.

With the sophistication of today's computers, and the use of near real-time CAN bus networks, a single circuit on a vehicle may be controlled by the interaction of multiple modules.

In this type of system, "Module A" may receive an input from a sensor or switch, process the information, and then send a signal out over the bus network. "Module B" receives this signal as an input, processes this signal, and then commands an output to turn on or off a device.

CARCHIPCARE
https://carchipcare.com
+91 9269969060

INTERNAL MODULE COMPONENTS

The electronic control module (ECM) circuits typically contain four general sections or areas:

1. Central processing unit (CPU)
2. Memory storage locations
3. Input signal processing
4. Output signal processing

All of these areas must work together for the controller to function properly.

Central Processing Unit

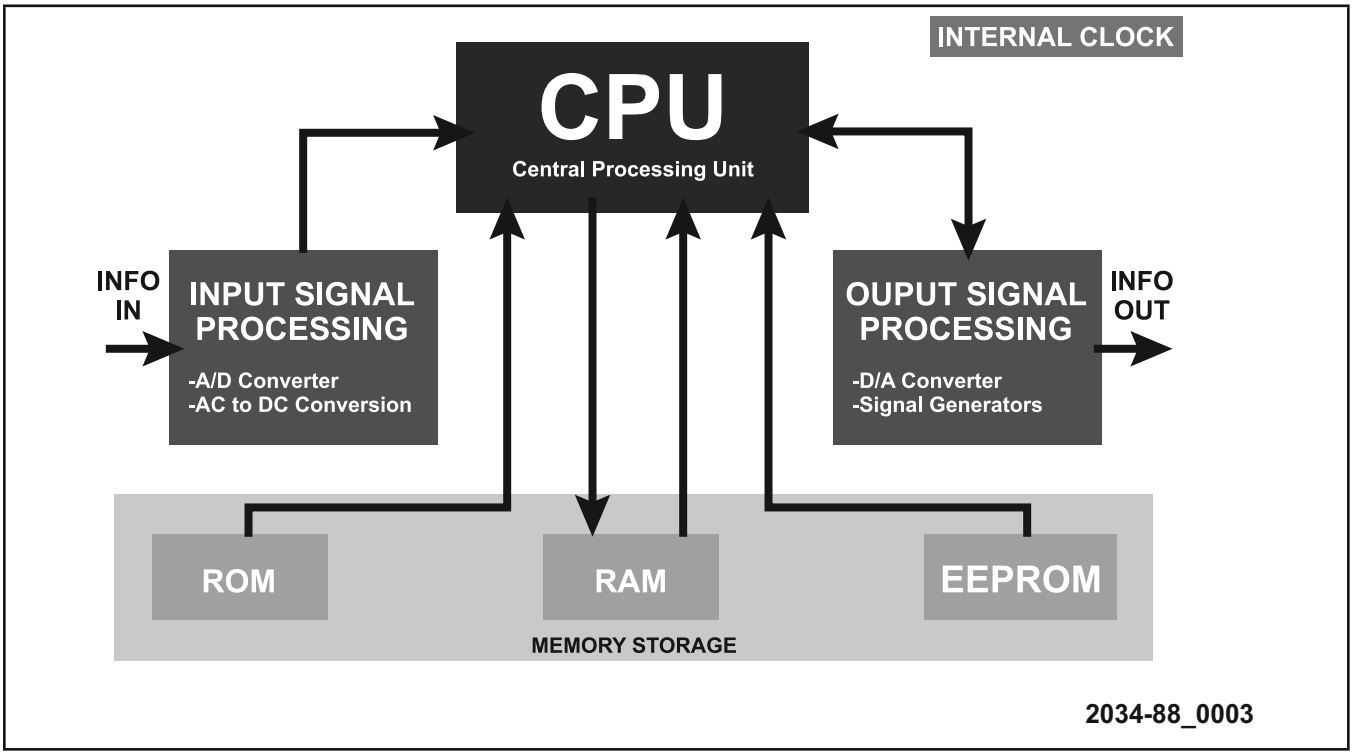

Figure 3 Central Processing Unit

The "brain" of the ECM is the CPU. The CPU is a microprocessor that makes all of the calculations and decisions for the module. Other components within the module help the CPU carry out its tasks. Programmed instructions allow the CPU to analyze data that it receives and compare it with any stored information. CPUs only understand digital signals or ON/OFF states, so any input signal that is not digital must be converted into a digital format. The CPU then decides what commands are needed to control an output to a load device. These signals may have to be converted to analog if the load requires it. Some modules are programmed to monitor their own system operation and internal faults. These modules can store diagnostic trouble codes (DTCs) as a diagnostic aid to help locate faults or indicate if an internal failure has occurred.

CARCHIPCARE
https://carchipcare.com
+91 9269969060

Voltage Regulators

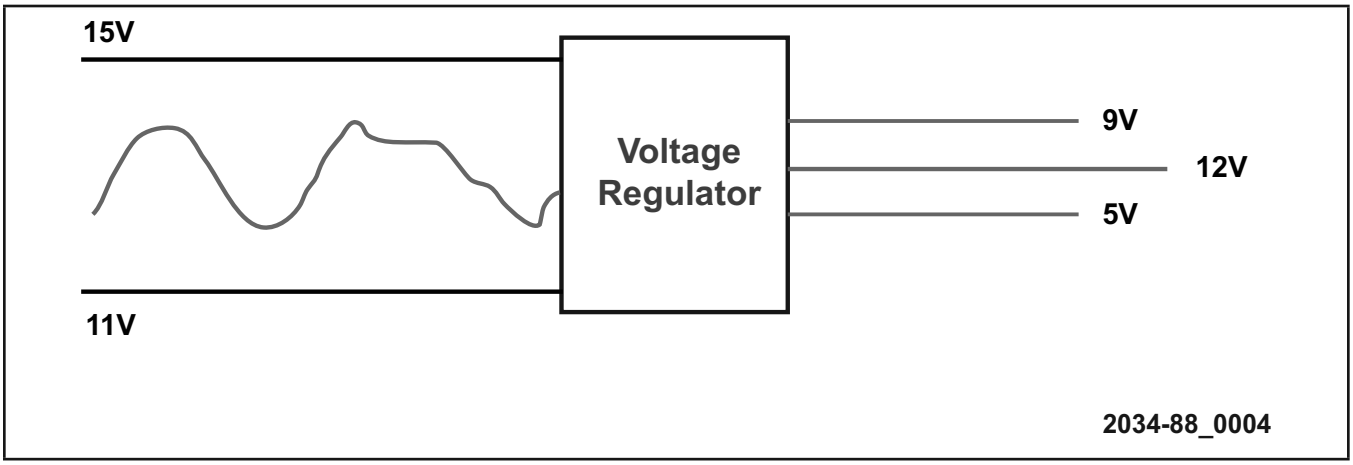

Figure 4 Voltage Regulating Circuit

The system voltage on a vehicle can fluctuate due to conditions such as varying loads, changes in engine speed, and other factors. Control modules have solid-state voltage regulator circuits that are designed to provide a steady, consistent reference voltage supply to sensors. If a sensor receives a reference voltage that fluctuates or is unstable, the sensor signal to the controller may be inaccurate. The voltage regulators supply a specific reference voltage, such as 5-volts, 9-volts, or 12-volts.

Input Signal Processing

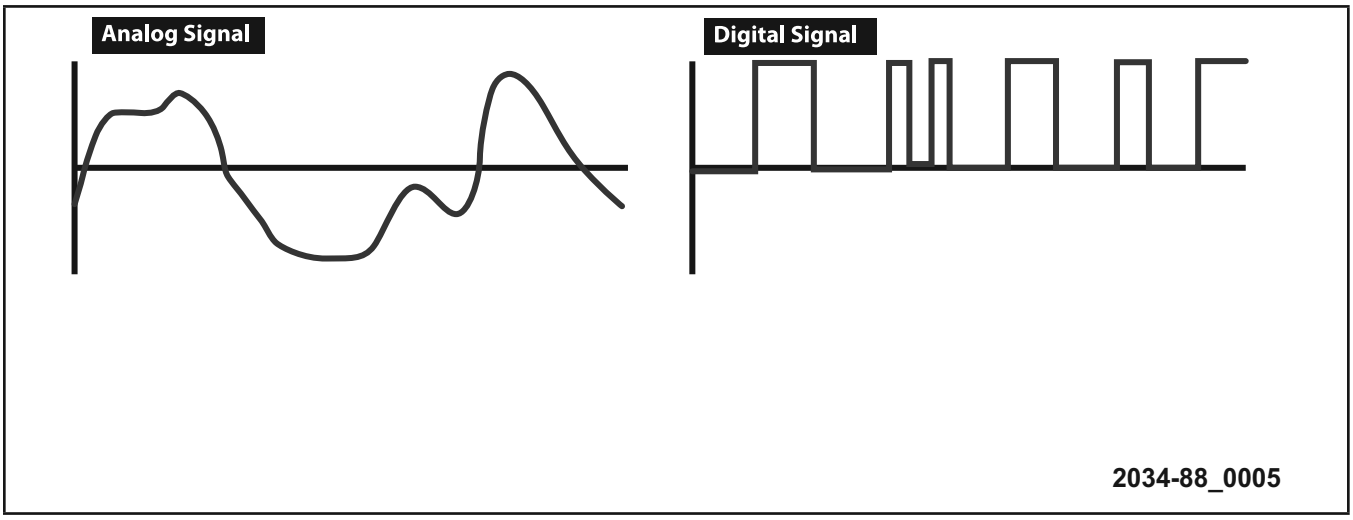

Figure 5 Input Signal Processing

Input signals received by processors may be analog or digital. Signal processing is a term that describes how a controller converts analog signals received from input devices into digital signals that can be understood by the processor.

CARCHIPCARE
https://carchipcare.com
+91 9269969060

Analog vs. Digital Signals

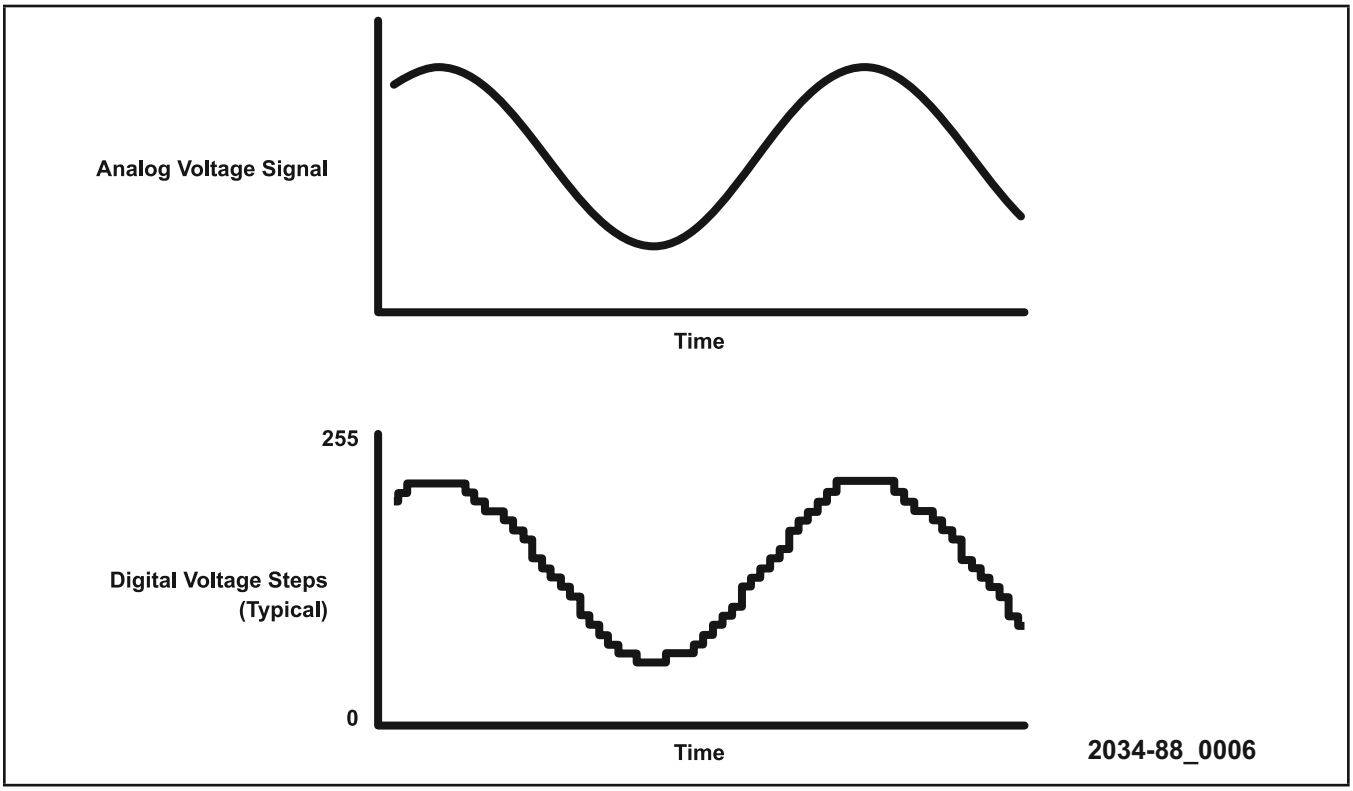

Figure 6 Analog vs. Digital Signals

Continuously varying analog signals, such as some throttle position sensor signal voltages, are converted by the analog-to-digital (A/D) converter to a series of digital values or steps. The range of digital values may be 255 or more discrete values. Therefore, the analog-to-digital converter can provide a specific digital equivalent value for any given analog voltage value.

CARCHIPCARE
https://carchipcare.com
+91 9269969060

Analog-to-Digital Conversion

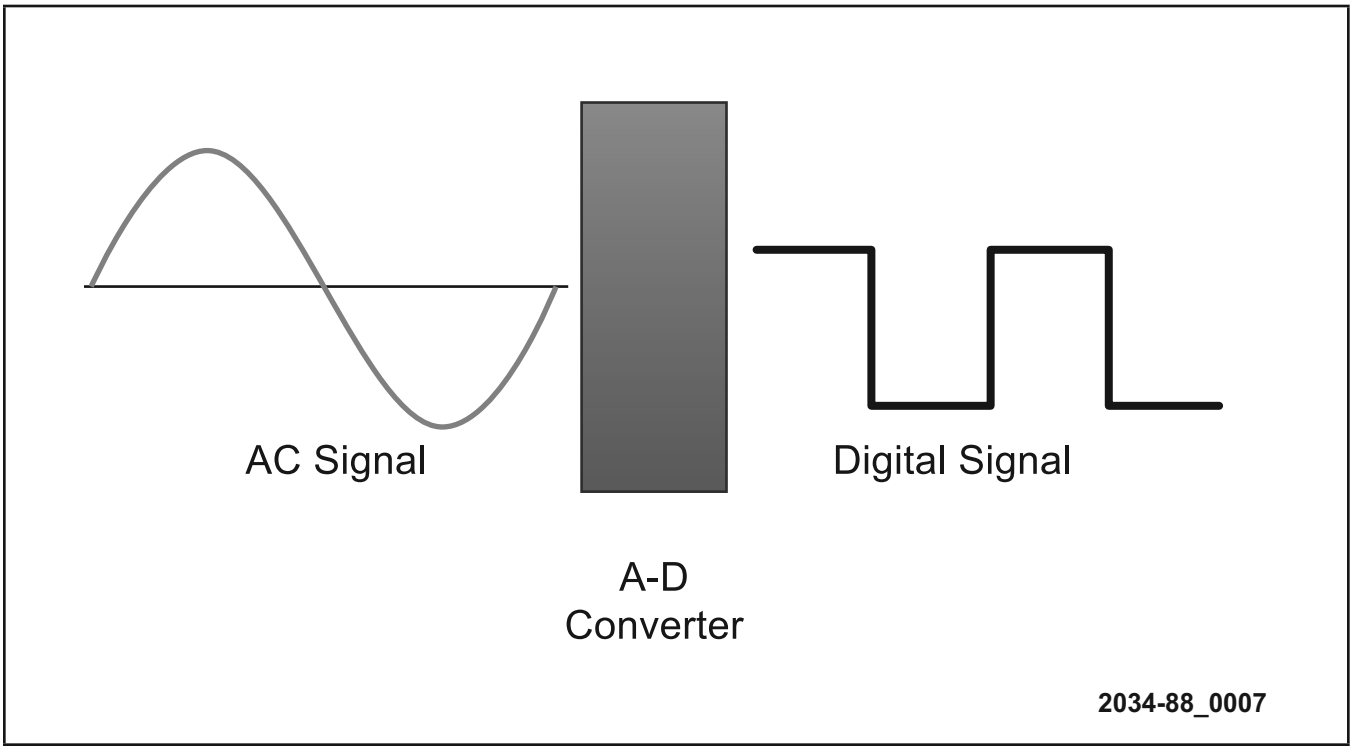

Figure 7 Analog-to-Digital Conversion

An integrated circuit within a module converts an analog voltage to digital representation to be processed by the control module.

CARCHIPCARE
https://carchipcare.com
+91 9269969060

Digital-to-Analog Conversion

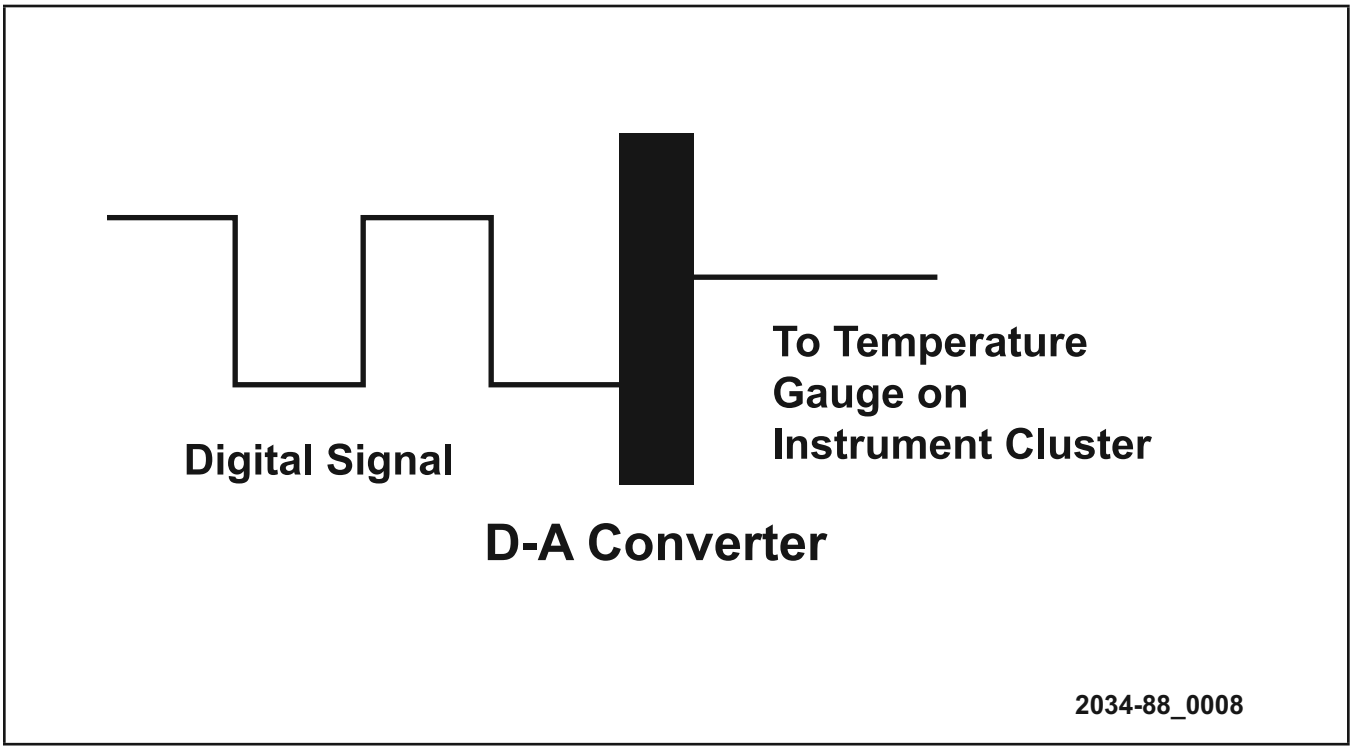

Figure 8 Digital-to-Analog Conversion

Outputs from processors may directly control loads, control relays or drivers that control loads, or command and control another processor.

Outputs from processors are not sent directly to the load devices. Outputs are sent to a memory location while still in digital form. Output signal processors retrieve this information from memory and convert it to a form that the receiving device can use. A digital-to-analog (D/A) converter does just the opposite of the analog-to-digital (A/D) converter. It takes the digital information from the processor and converts it to an analog voltage output.

CARCHIPCARE
https://carchipcare.com
+91 9269969060

CPU Memory

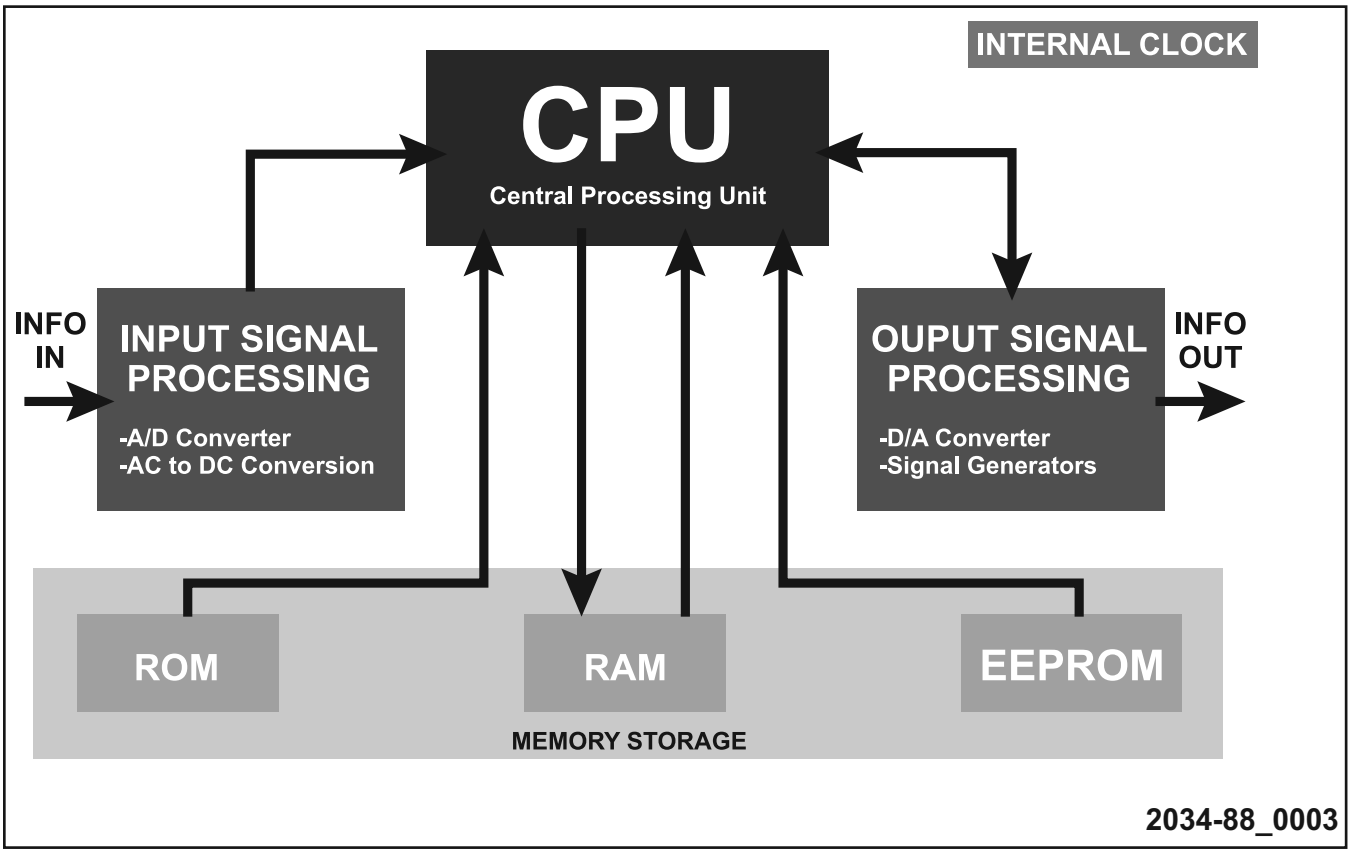

Figure 9 CPU Memory Storage

Processors must have memory storage available to perform their assigned tasks.

- Read-only memory (ROM)
  - ROM is “hard-coded” memory that the CPU can read but cannot change or modify.
- Random Access Memory (RAM)
  - RAM is a memory location that the CPU can both read information from, and write information to.
  - Volatile: Memory that is erased when the ignition is turned OFF.
  - Nonvolatile: Memory that is not lost when the ignition is turned OFF.
- Electronically erasable programmable read-only memory (EEPROM)
  - EEPROM can be “flash” reprogrammed electronically without removing the module from the vehicle. This type of memory is used for updating and revising programs and calibrations stored for use by a CPU.

CARCHIPCARE
https://carchipcare.com
+91 9269969060

Internal Clock

Microprocessors have internal clocks that provide steady time pulses. Each pulse is one bit in length. The memory storage devices count these pulses while sending or receiving information so that the length of the message is known. The clock also helps the processor to time and schedule events.

Module Self Diagnosis

Some control devices can monitor functions and recognize failures. Fault detection programming allows the controller to compare inputs and outputs to known values stored in memory. When an input or output value goes out of the expected range for the conditions present, then the controller recognizes a fault and stores a DTC for the specific fault. Missing or implausible data from the other control modules may also be recognized as a fault.

DTCs are stored by the controller in a non-volatile memory location. Additional data pertaining to the fault may also be stored. This may include the fault status active or stored, and the number of key cycles since the fault was set. DTCs can be retrieved with the appropriate diagnostic tool.

Control modules can monitor circuits for these types of faults:

- Open circuits
- Circuits shorted to power
- Circuits shorted to ground
- Rationality or plausibility faults

CARCHIPCARE
https://carchipcare.com
+91 9269969060

Diagnostic Circuit

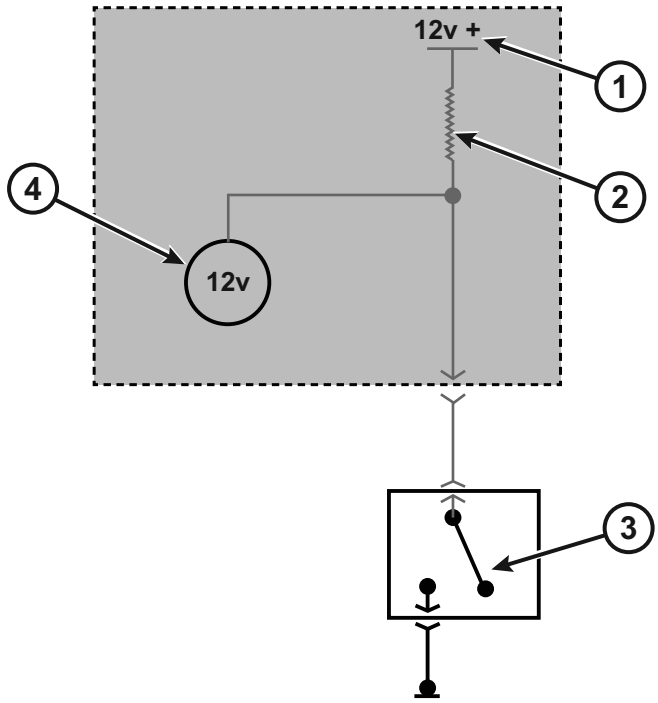

1	Reference Voltage	3	Open Switch
2	Current-limiting Pull-up Resistor	4	Voltage Monitoring Circuit

Figure 10 Sensor Diagnostic Circuit

To recognize these fault conditions, controllers look for out-of-range voltages that are higher or lower than threshold values. Also, controllers may compare signals from several sources to determine if they all make sense when compared with each other and current conditions. If one signal does not make sense when compared with the others, a rationality fault may be set. The controller may also be aware of sensor tolerances and circuit resistances.

Some control modules can monitor functions and recognize failures. Fault detection programming allows the control module to compare inputs and outputs to known values stored in memory. When input or output values differ from the expected range, the controller recognizes a fault and stores a DTC.

A diagnostic resistor is placed in the sensor signal circuit. The control module self-diagnostics typically do not expect to see voltages at the extremes of 0 volts and 5 volts. These values are reserved for fault detection. The diagnostic resistor pulls voltage high to 5 volts when an open occurs, and pulls voltage low to 0 volts when a short to ground occurs. The current limiting resistor and diagnostic resistor also prevent excessive current draw when shorts occurs to prevent damage to the control module.

CARCHIPCARE
https://carchipcare.com
+91 9269969060

OUTPUT CONTROLS

The ECM can control output devices, or loads in different ways. Both low-side drivers (LSD) and high-side drivers (HSD) are used to turn a load device on or off.

Low-Side Drivers

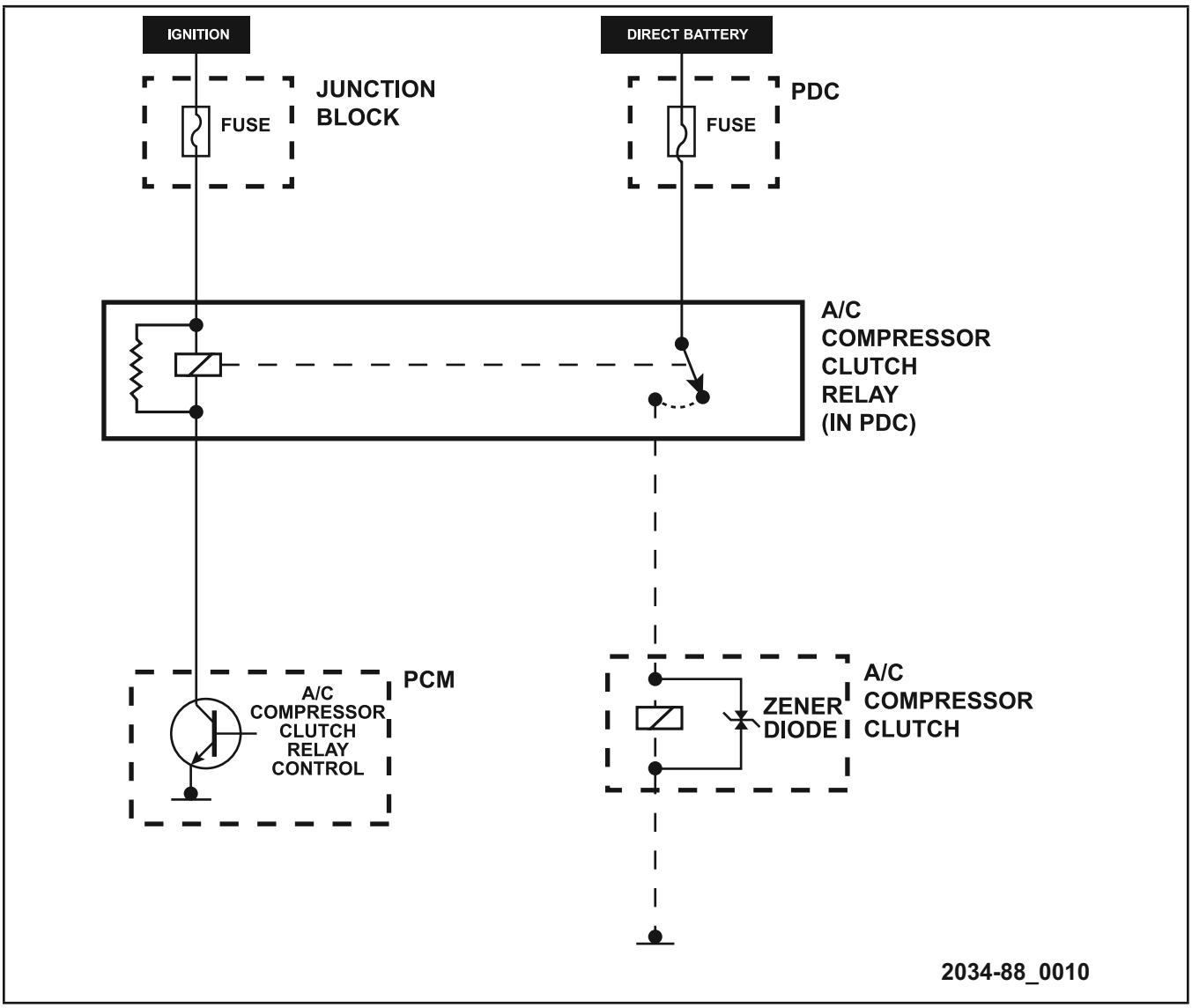

Figure 11 Low-Side Drivers

LSDs supply a ground to the load device to complete the circuit. The module may monitor the voltage on this circuit to determine if the devices work as commanded, and if the circuit has been completed. If the module does not see a voltage drop, or a change in current flow when energizing the LSD, the module typically sets a DTC.

The schematic shows a typical air conditioning (A/C) clutch relay, activated by an LSD. The coil side of the A/C compressor clutch relay is fed 12-volts from the ignition. The other side of the coil is grounded by the powertrain control module (PCM) by energizing an LSD.

CARCHIPCARE
https://carchipcare.com
+91 9269969060

High-Side Drivers

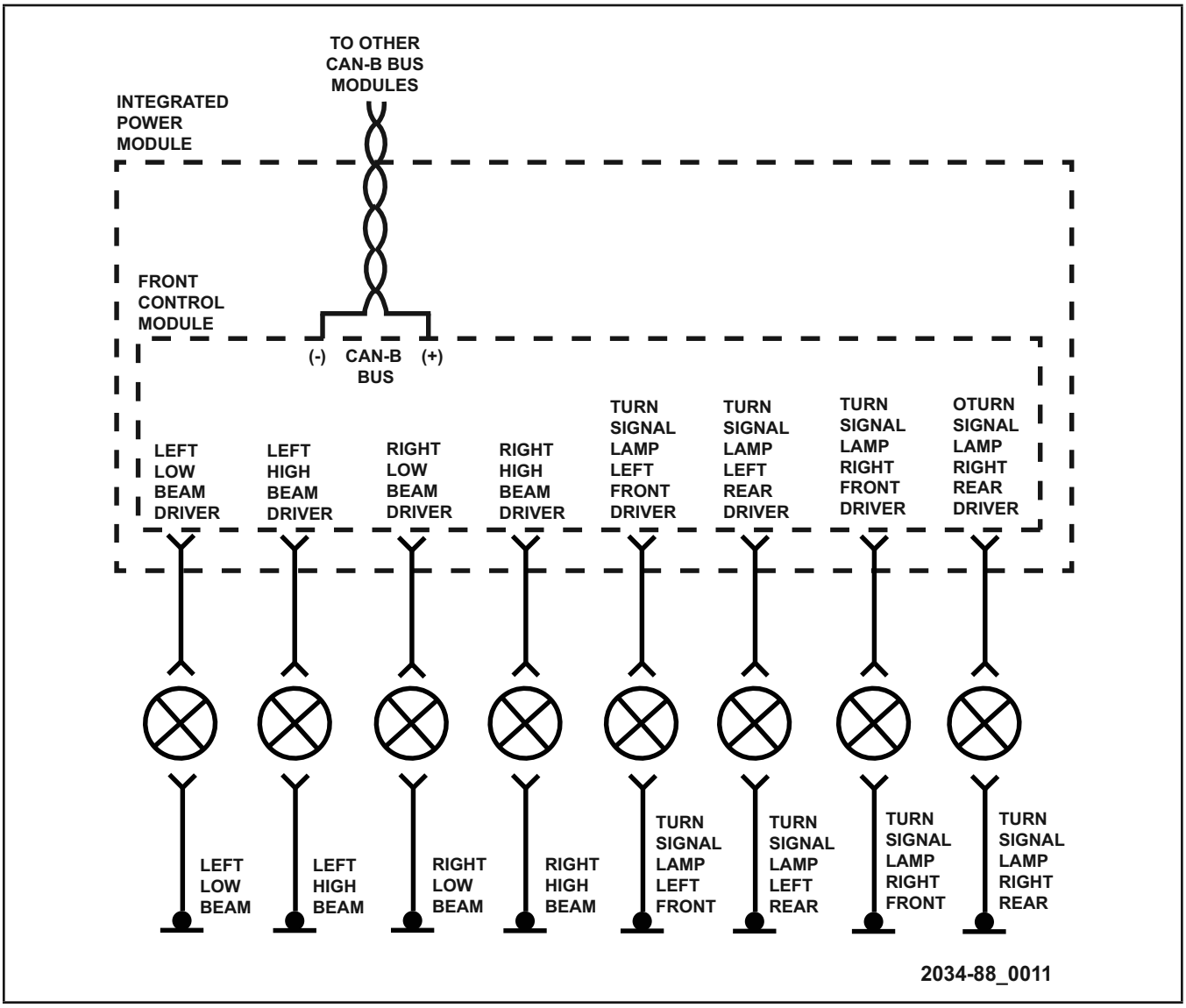

Figure 12 HSD Controlled Lighting Circuits

HSDs control a load device by maintaining a 12 volt supply and varying the frequency or by pulse-width-modulating the signal to the load device. Some HSDs have enhanced diagnostic capabilities. Several DTCs can be set depending on the condition of the circuit being monitored. It can quickly monitor for short and open circuits and excessive current draw indicated by a rise in temperature. If excessive current draw is detected, the control module can turn off the HSD during excessive load conditions and reactivate when the load drops, much like a self-resetting circuit breaker. Additionally, HSD circuits test the continuity of a circuit when it is off, by sending out and monitoring a small amount of feedback voltage.

Since a HSDs output is a pulse width modulated (PWM) signal, an HSD controlled device can not be tested using a jumper wire. In the schematic shown, the turn signal and head lamp bulbs are grounded. When the operator requests either head lamps or turn signals to be operated, the integrated power module (IPM) responds by energizing an HSD, providing voltage to the circuit.

CARCHIPCARE
https://carchipcare.com
+91 9269969060

Pulse Width Modulation

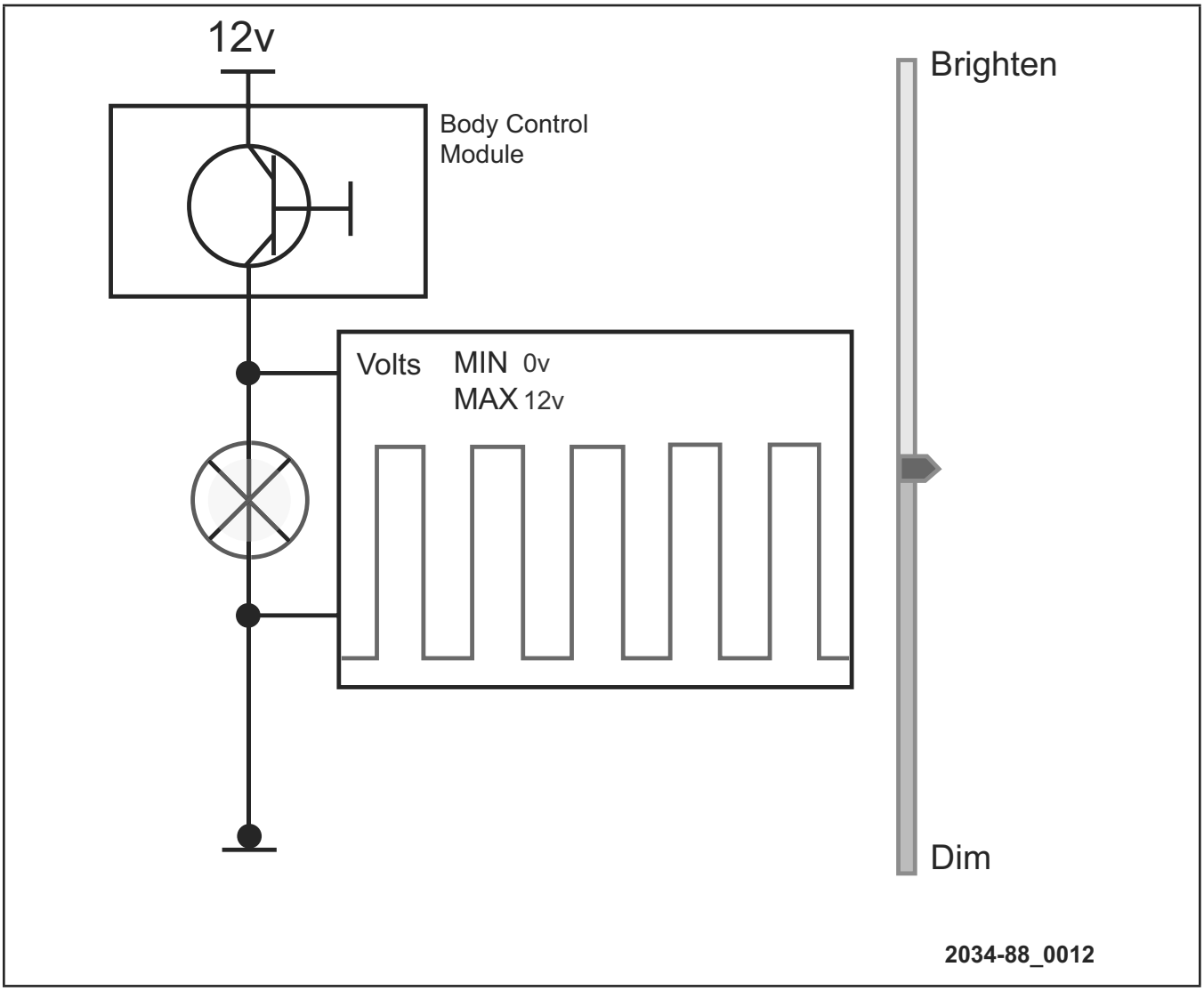

Figure 13 Pulse Width Modulation

PWM is a method of controlling power to a load device by controlling the on-time, compared to the off-time. PWM is displayed and measured as a duty cycle percentage. This can be used to vary the speed of a motor, or change the intensity of a lighting circuit. An HSD is actuated at a very high frequency. If the circuit is turned on for longer than it is off, a motor speeds up or a lamp gets brighter. A lower rate of PWM results in a lower motor speed or dimmer lamp. PWM is commonly used in dash lighting and day time running lamp circuits. As the duty cycle increases, voltage increases, and the lamp becomes brighter.

CARCHIPCARE
https://carchipcare.com
+91 9269969060

Duty Cycle

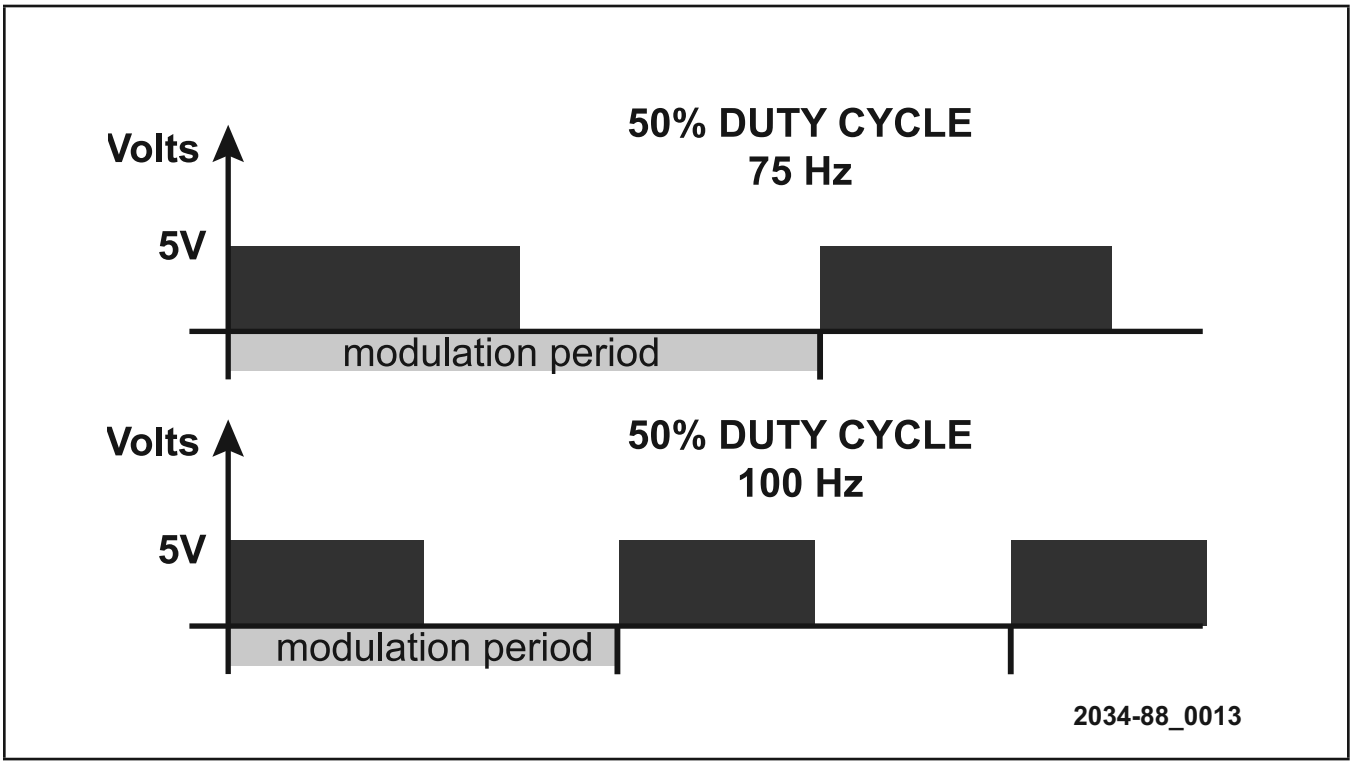

Figure 14 Duty Cycle

Duty cycle refers to the amount of on-time versus the amount of off-time of a component, however the frequency of the signal may change during operation. This is in contrast to a PWM circuit where the frequency remains the same. Duty-cycle-controlled devices usually receive power all the time, while a module completes the ground side of the circuit. An example of a duty-cycle-controlled device is a canister purge solenoid.

CARCHIPCARE
https://carchipcare.com
+91 9269969060

POWER SUPPLIES AND GROUNDS

The 12-volt battery and ignition feeds (some modules), as well as the ground supplies to a module are critical for the module's proper operation. Before attempting to diagnose a module malfunction, or DTC, it is extremely important to make sure that these circuits do not have any resistance. Many "repeat" module failures are a result of excessive resistance in its power feeds or grounds. Voltage drop testing can be performed to validate proper operation of these circuits.

Battery Power

The 12-volt battery feeds to a module are used to supply power to the internal module components.

Ignition Feed

The ignition feed is used on some applications to provide a "wake-up" signal to the module. Some modules on vehicles equipped the CAN bus system do not use an ignition feed. Instead they rely on a "wake-up" signal being transmitted on the CAN bus network.

Battery Ground

Every module has at least one ground feed, but more often there are multiple ground sources. The ground feed is used to supply ground to the internal module components and the LSDs.

Sensor Ground

Many modules have an internal circuit that is used to filter out any radio frequency interference (RFI) or electromagnetic induction (EMI) "noise" from a ground. The module then supplies this "clean" ground to each sensor. This ensures that each sensor has the same potential to ground, and consistent values without any outside interference.

CARCHIPCARE
https://carchipcare.com
+91 9269969060

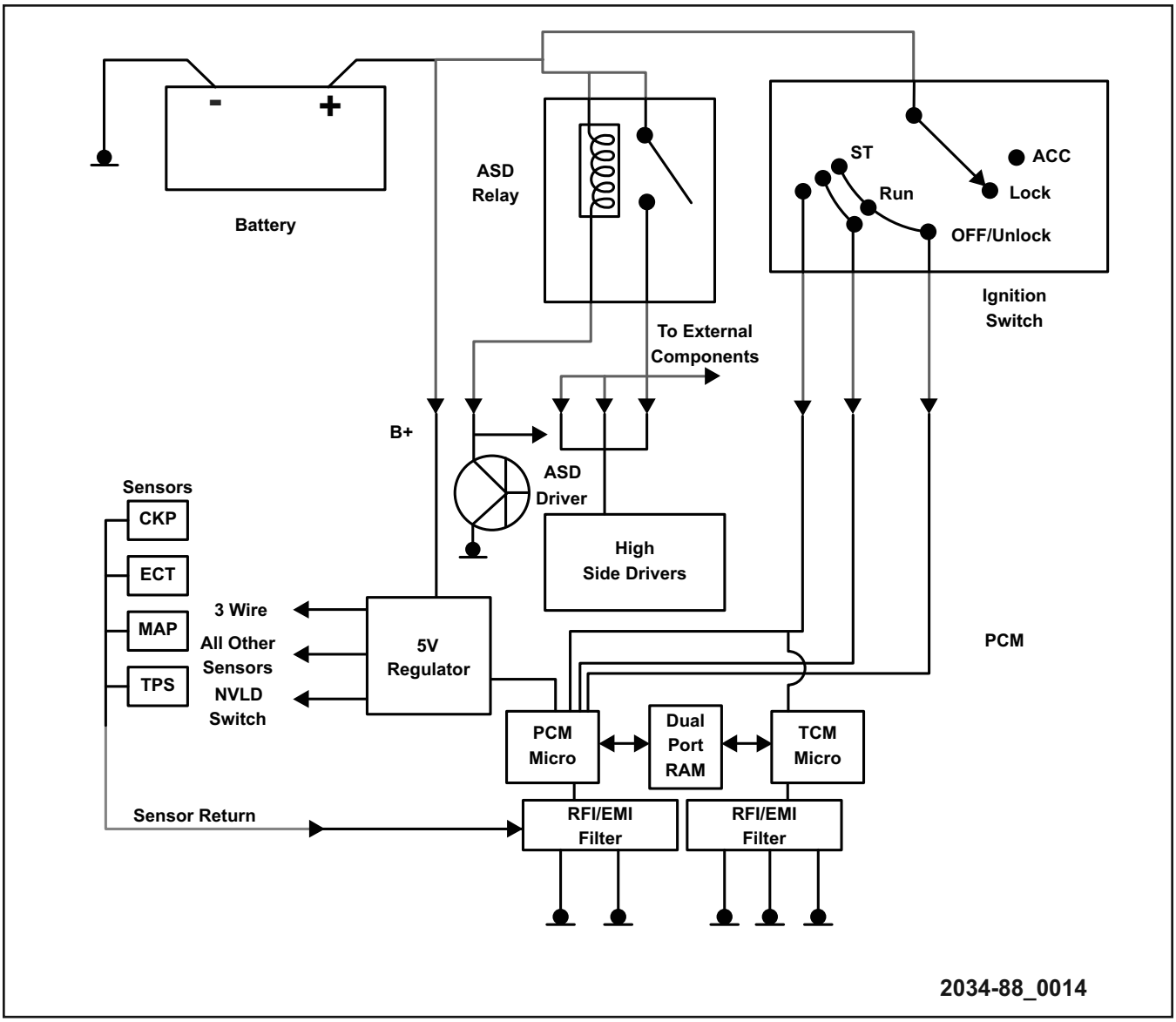

Figure 15 Power and Ground Supplies

CARCHIPCARE
https://carchipcare.com
+91 9269969060

Network Communication Circuits

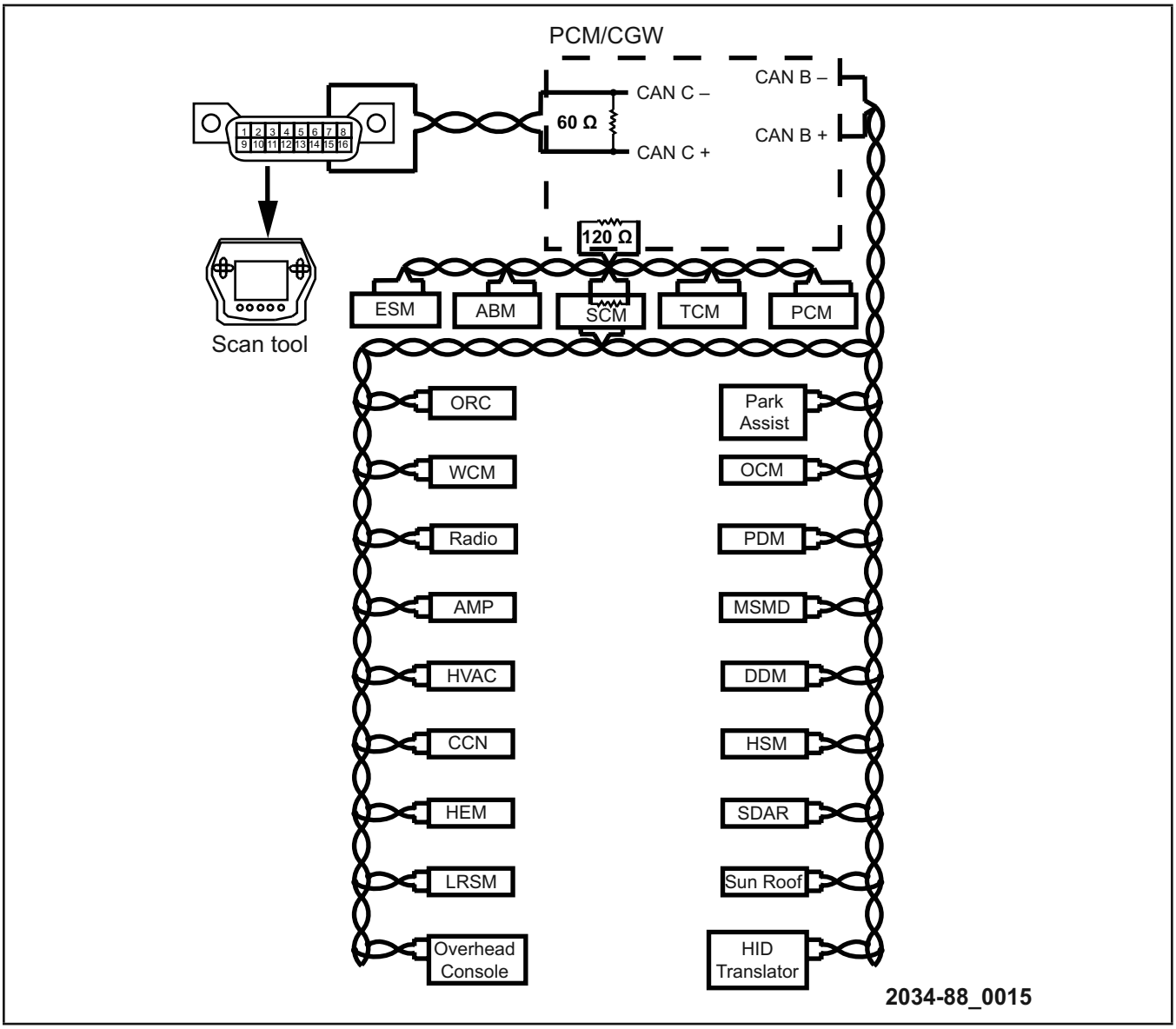

Figure 16 CAN Bus Network

As mentioned before, there are many advantages to networks, such as reduce wiring complexity of the vehicle, smaller wire gauge wiring due to reduced current load, and a reduction in the number of input devices (sensors) needed to provide the same information to multiple modules.

Modern CAN bus networks, with their near real-time communications, allow features in today's vehicles that were thought of as impossible at one time. Features like electronic stability programming (ESP), electronic throttle control (drive-by-wire), and interactive and adaptive cruise control systems would not be possible without real time exchange of information among modules.

CARCHIPCARE
https://carchipcare.com
+91 9269969060

Notes:

CARCHIPCARE
https://carchipcare.com
+91 9269969060

LESSON 2 MODULE INPUTS

MODULE INPUTS

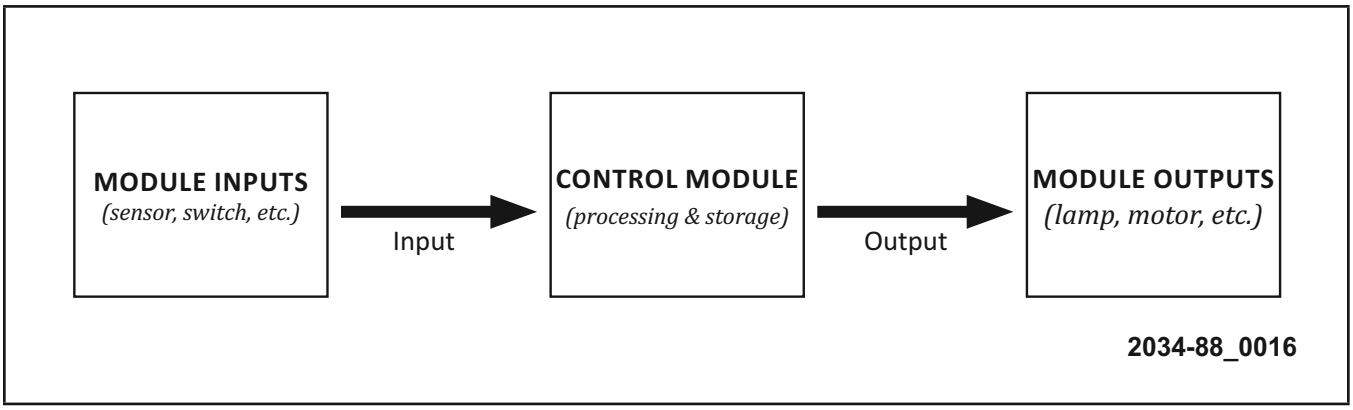

Figure 17 Input Processing

Computers are very simple devices that only understand two states, on or off. What makes their simplicity so powerful is the speed at which they can analyze information that they receive, and then provide an expected output.

All computer systems depend on information being provided to them, and vehicle modules are no exception. Vehicle computers also require information so they can make decisions and provide an expected output, such as how much to open the throttle, which lamps to turn on, which gear the transmission should be in, or when to deploy an airbag.

The source of this information comes from two categories of inputs: switches and sensors.

SWITCHES

Switches are the most "computer friendly" and can deliver immediate information if there is an abrupt change of state. This is critical in some circuits, like a crankshaft or camshaft position signal. Because modules are digital devices and only understand one of two states, switches are a ideal inputs. The information received from a switch can be used directly by a module as-is, because it is already in a digital state.

Switch Inputs

- Open/Closed
- On/Off
- Pressed/Released
- Present/Not Present

When observing switches on a scan tool, they may be represented many different ways, depending on the vehicle family, model year, or manufacturer of a module. All you need to remember is that it is a two-state device. The switch is providing a signal, or it's not. It's that simple. Let's take a look at some of the types of switches that are used on our vehicles.

CARCHIPCARE
https://carchipcare.com
+91 9269969060

Ground-Side Switches

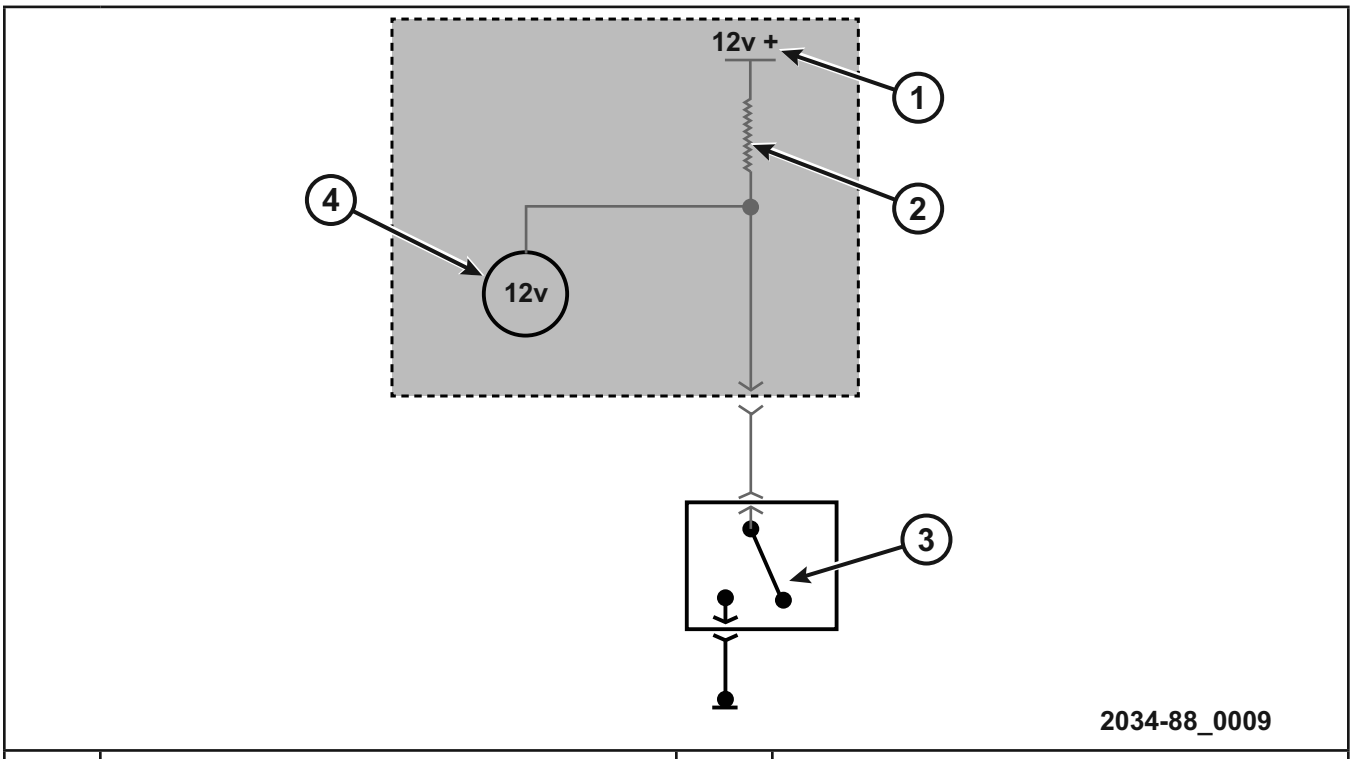

1	Reference Voltage	3	Open Switch
2	Current-Limiting Pull-up Resistor	4	Voltage Monitoring Circuit

Figure 18 Ground-Side Switch Circuit

A ground-side switch makes and breaks a circuit on the ground-side of the circuit. When the switch contacts are closed, the reference voltage is grounded through the switch contacts. The voltage monitoring circuit in the controller measures 0 volts on the circuit. When the switch contacts are open, no current flows and the reference voltage does not drop across the resistor. The voltage monitoring circuit in the controller sees the full reference voltage on the circuit.

Ground-Side Switches

- Park/neutral switches
- Door-ajar switches
- Wiper park switches
- Seat belt switches

CARCHIPCARE
https://carchipcare.com
+91 9269969060

Power-Side Switches

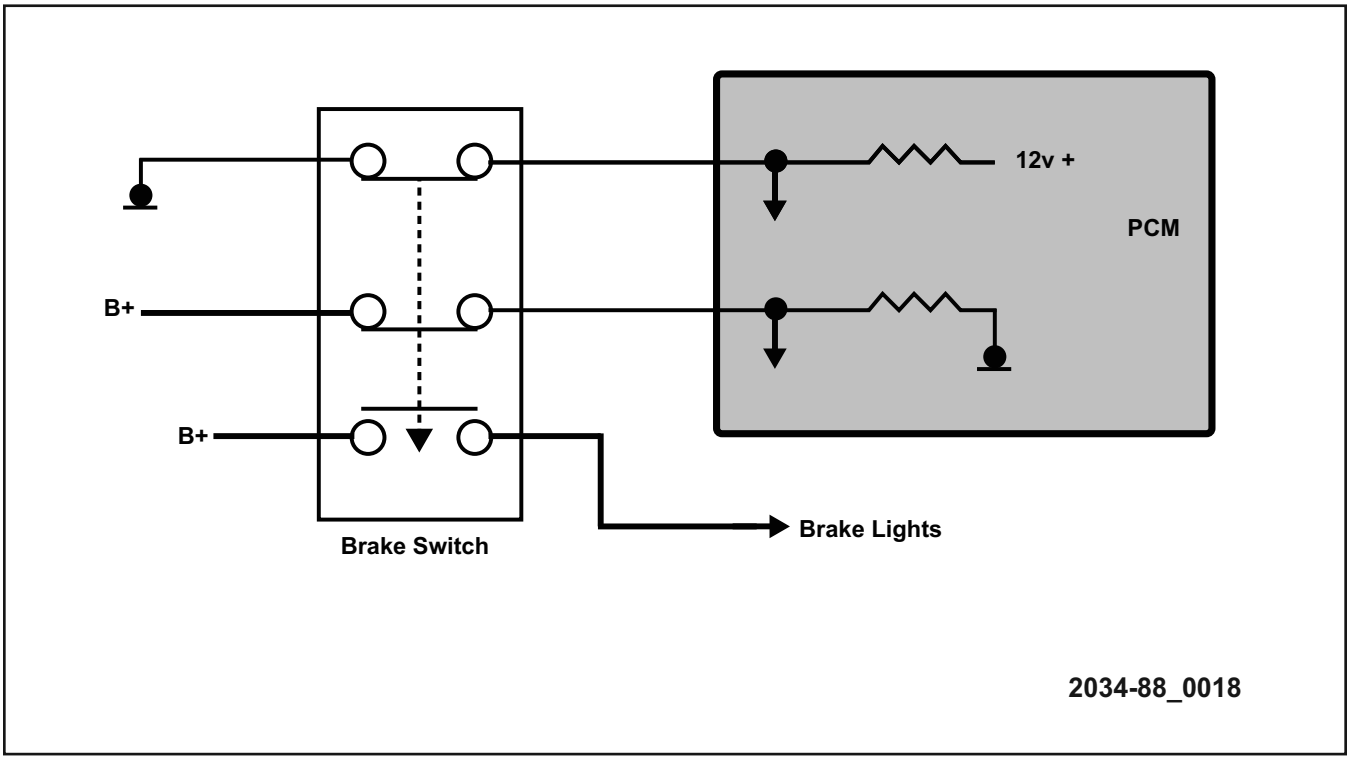

Figure 19 Power-Side and Ground-Side Switch Circuit

A power-side switch makes and breaks a circuit on the feed or power side. The switch can turn on and off a power feed that is hard-wired directly to a load.

A power-side switch can serve as an input signal to a module. In this case, when a switch is in the closed position, the module senses the voltage from the switch through a current-limiting, pull-down resistor, and monitors circuit voltage just after this resistor.

Power-side Switches

- Brake lamp
- Power seat
- Power mirror
- Windshield washer switches

In the graphic above, we see examples of both ground-side and power-side switching from the brake lamp switch.

CARCHIPCARE
https://carchipcare.com
+91 9269969060

Notes:

CARCHIPCARE
https://carchipcare.com
+91 9269969060

Two-State Pressure Switches

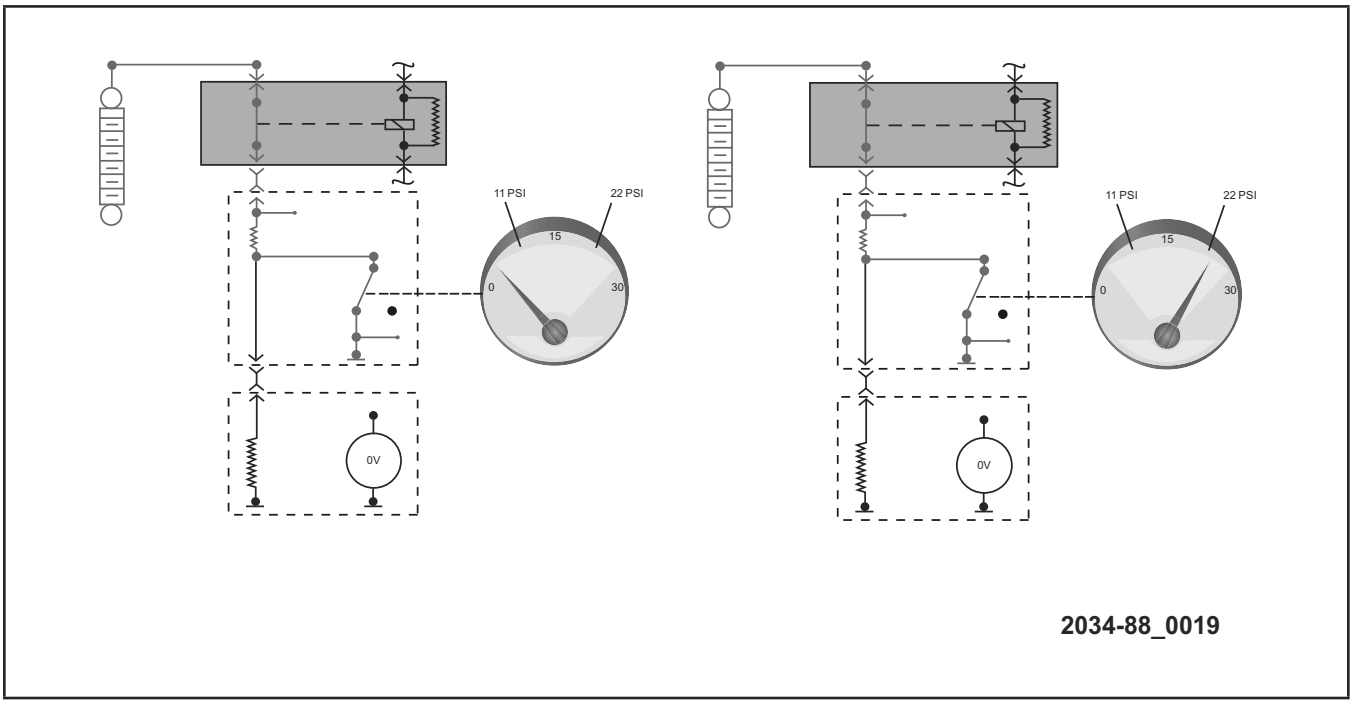

Figure 20 Pressure Switch Operation

Pressure switches are switches that change state in response to changes in pressure. Pressure switches can be used to sense A/C system refrigerant pressure, engine oil pressure, and automatic transmission oil pressure.

Typically, pressure switch contacts open and close at different pressure thresholds to prevent the contacts from cycling rapidly within a narrow pressure range.

Switches in a typical electronically-controlled transmission are an example of a two-state switch. Either there is pressure or there is not. In the graphic above, notice that 12 volts are fed through a resistor in the normally-open pressure switch. The powertrain control module (PCM) or transmission control module (TCM) on some vehicles is monitoring this voltage to ensure there is continuity through the circuit. When the pressure switch closes, this voltage is pulled to 0-volts, signaling that there is pressure in that hydraulic circuit.

CARCHIPCARE
https://carchipcare.com
+91 9269969060

Reed Switches

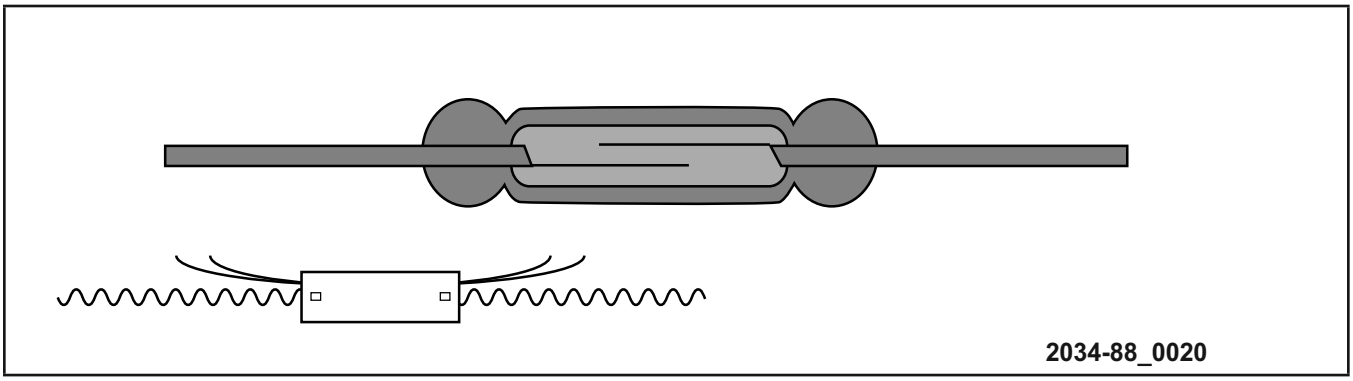

Figure 21 Reed Switch Open

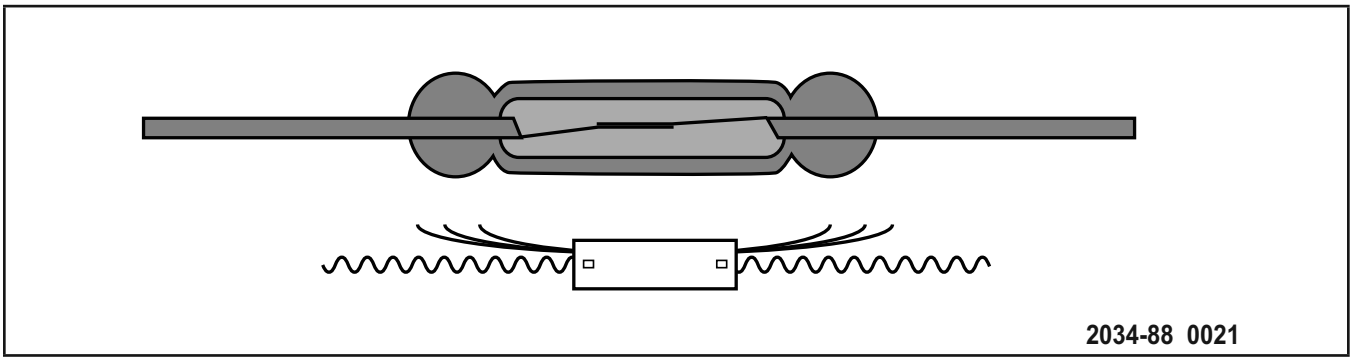

Figure 22 Reed Switch Closed

Reed switches are small, reliable switches that have two flexible reed contacts that are sealed in a glass tube filled with inert gas. The reeds overlap but are separated (normally-open). A magnetic field causes the reeds to become magnetized, bend, and come in contact to close the circuit. Reed switches cannot carry high current, but they can have a very long life when switching circuits with low voltage and low current.

Brake fluid level and washer fluid level switches are an example of a reed switch. Each of these switches is supplied with a reference voltage from a control module. When the level drops below a predetermined threshold, the switch closes and pulls the reference voltage to zero.

CARCHIPCARE
https://carchipcare.com
+91 9269969060

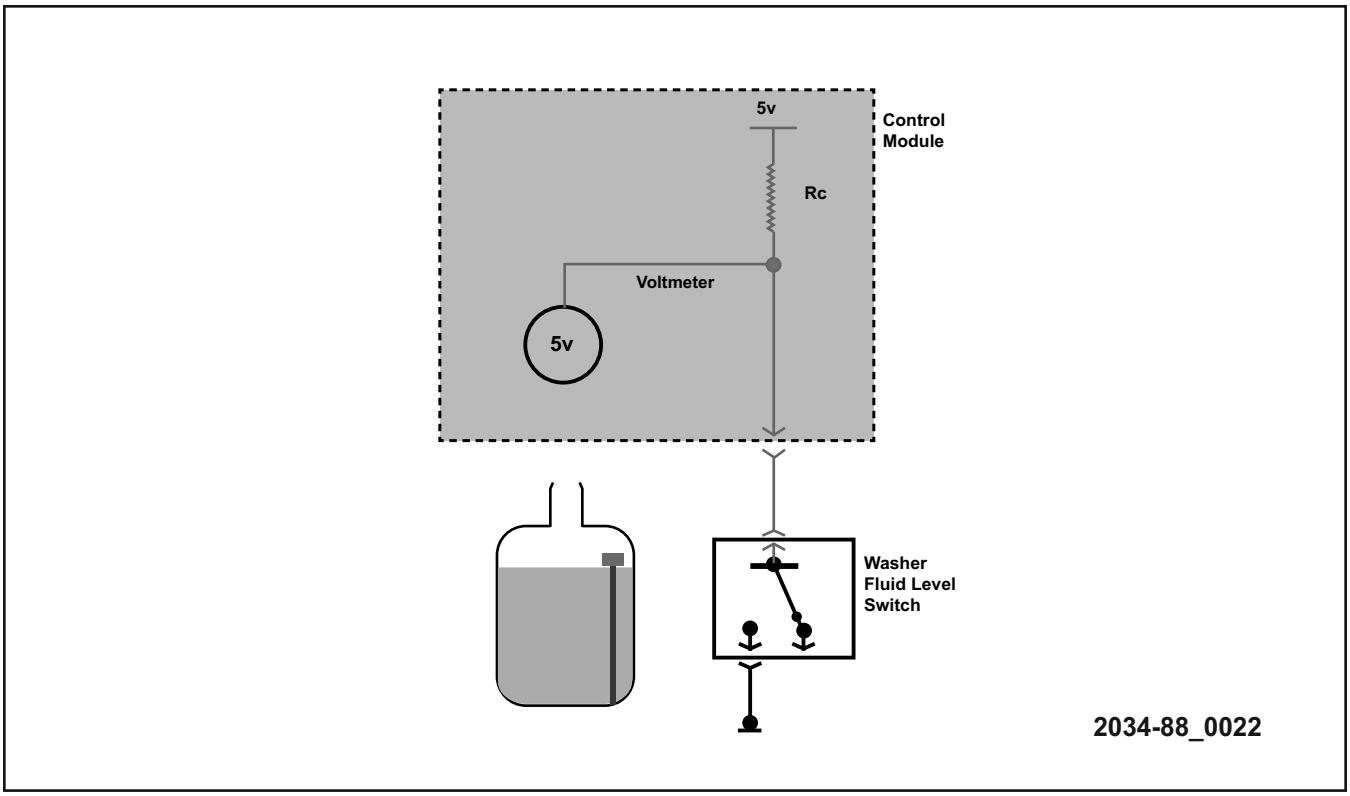

Figure 23 Reed Switch for Washer Fluid Level Open

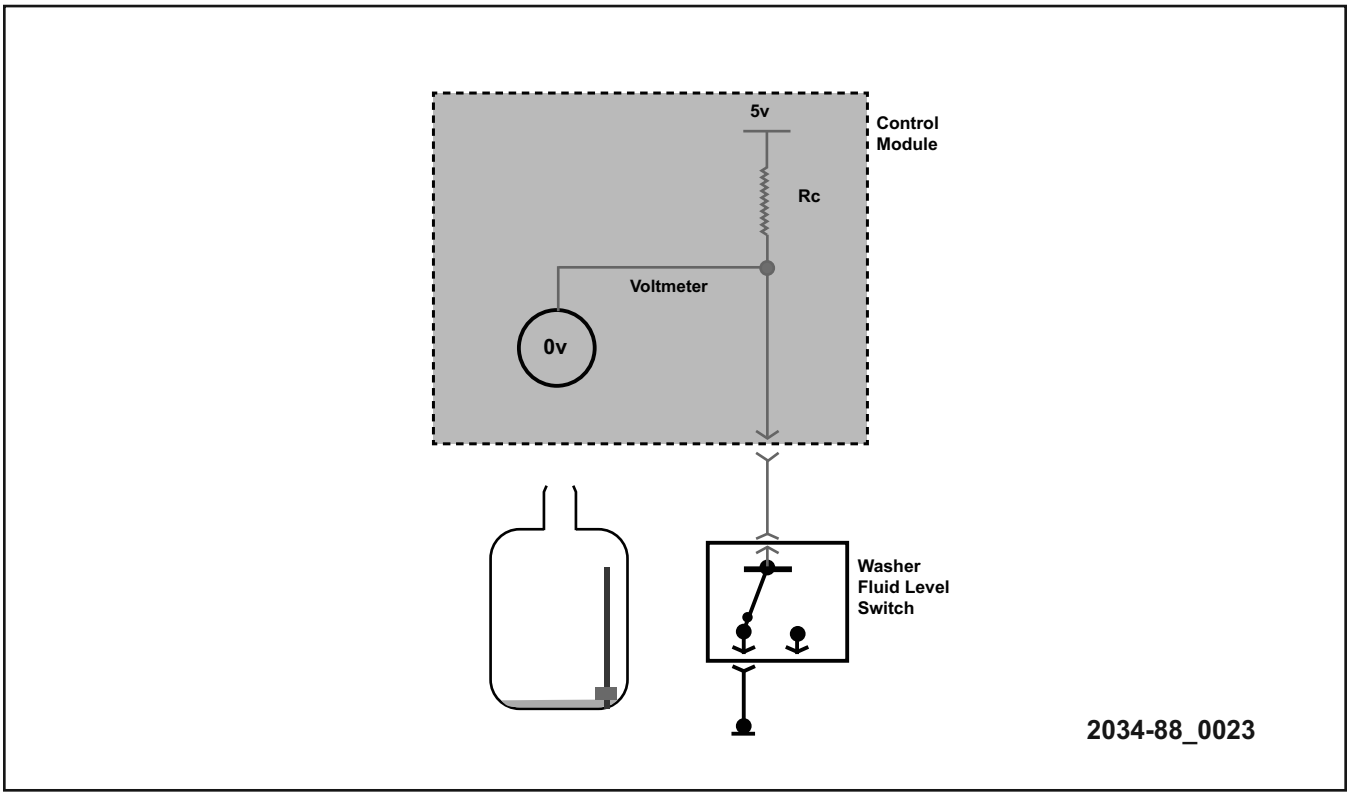

Figure 24 Reed Switch for Washer Fluid Level Closed

CARCHIPCARE
https://carchipcare.com
+91 9269969060

Notes:

CARCHIPCARE
https://carchipcare.com
+91 9269969060

Resistive Multiplexed Switches

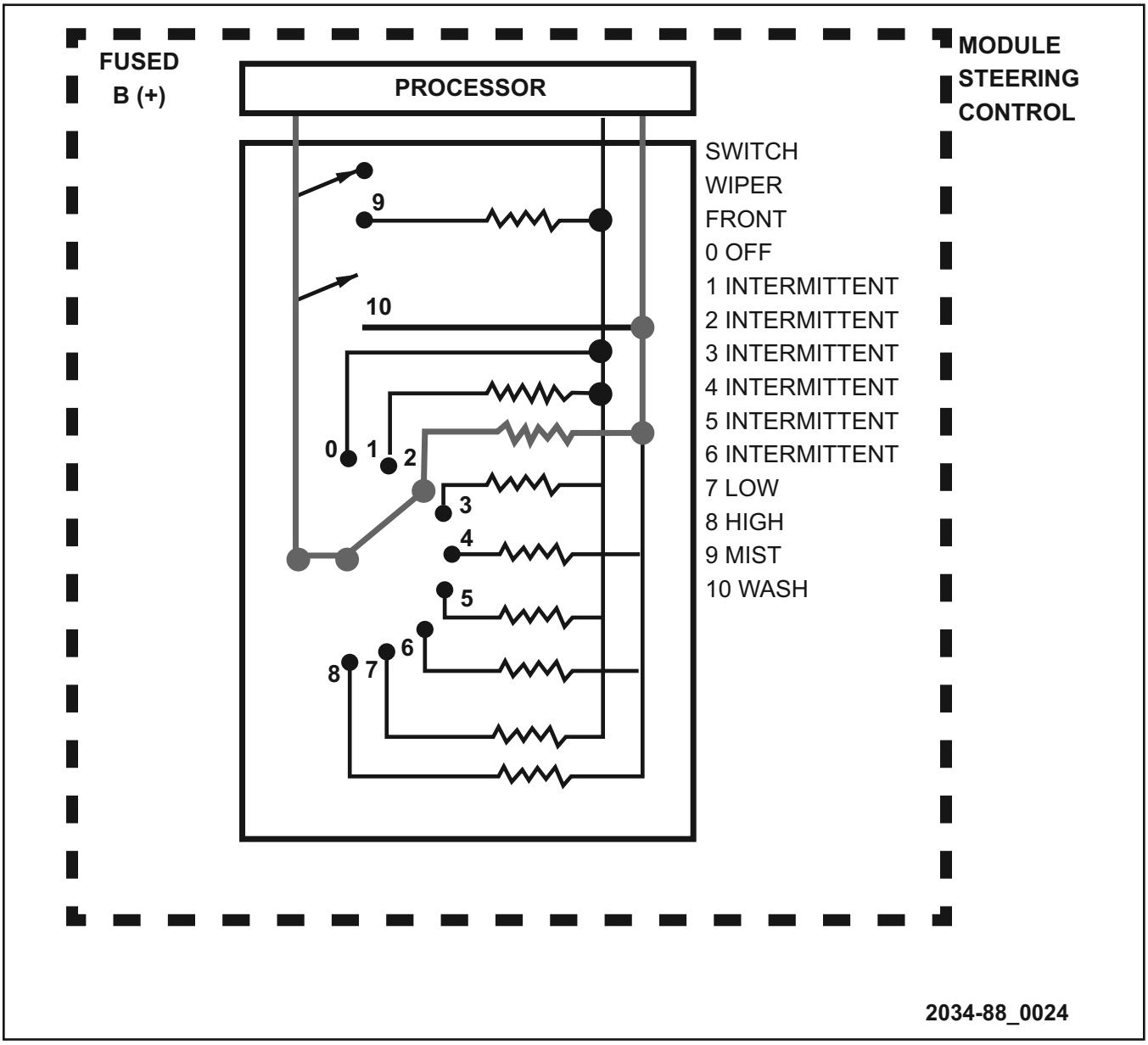

Figure 25 Windshield Wiper Switch

Multiplexing is a way to transmit more than one signal over a single circuit. Complexity and cost can be reduced because fewer circuits and components are needed. Resistive multiplexing (MUX) uses resistors with different values in the same circuit. As each switch closes and completes the circuit, the voltage drop through the switch resistor sends a unique signal voltage to a controller. The controller receiving the signal can determine which switch is closed and which function the sensed circuit voltage requests.

Some head lamp switches, ignition switches, and power lock switches are examples of resistive multiplexed circuits.

CARCHIPCARE
https://carchipcare.com
+91 9269969060

Position Switches

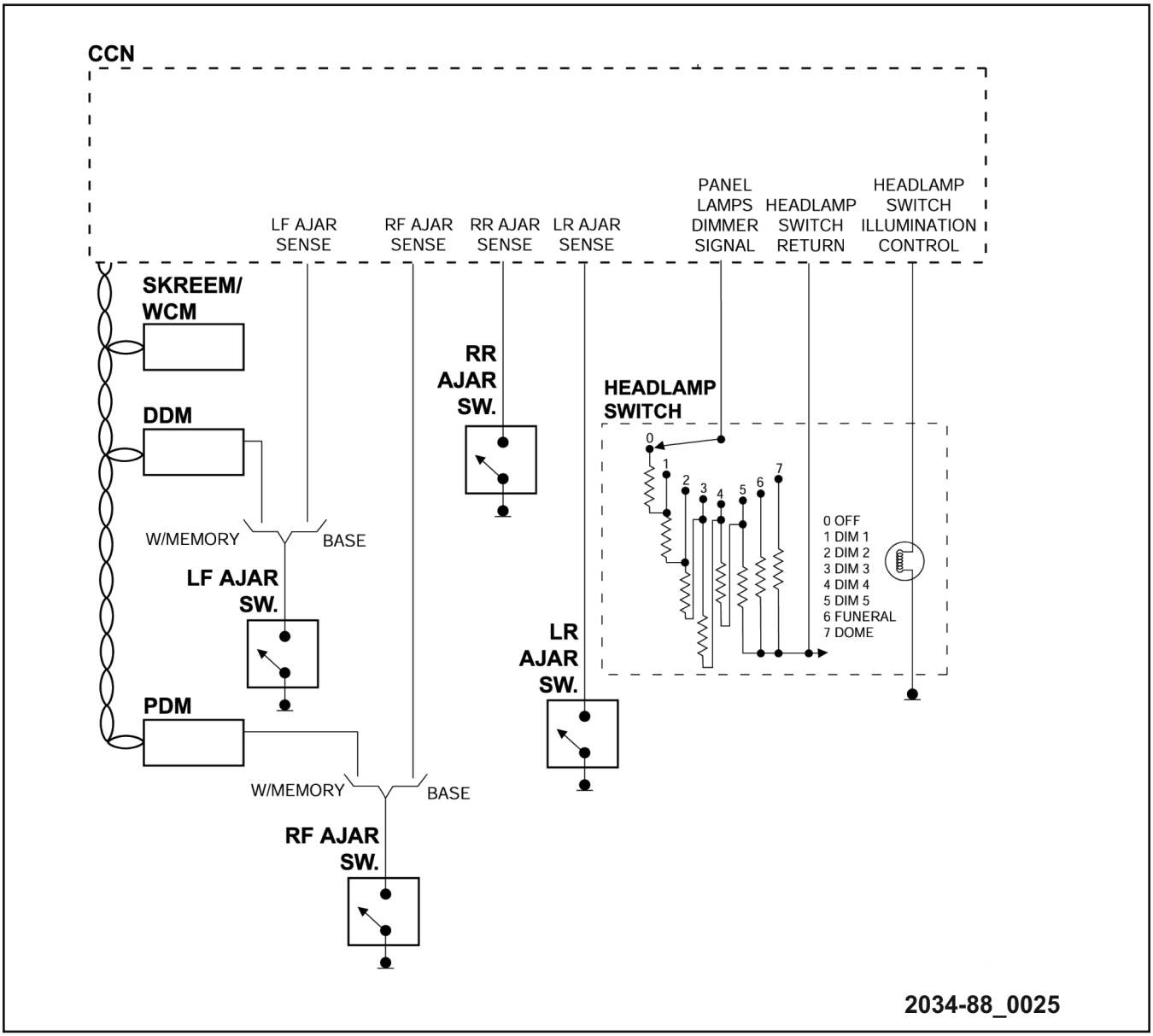

Figure 26 Digital Door Ajar Switches

Position switches receive a reference voltage from the module and when activated, either closes or opens the circuit to ground. Examples of this are door ajar or latch switches.

CARCHIPCARE
https://carchipcare.com
+91 9269969060

Multi-Position Switches

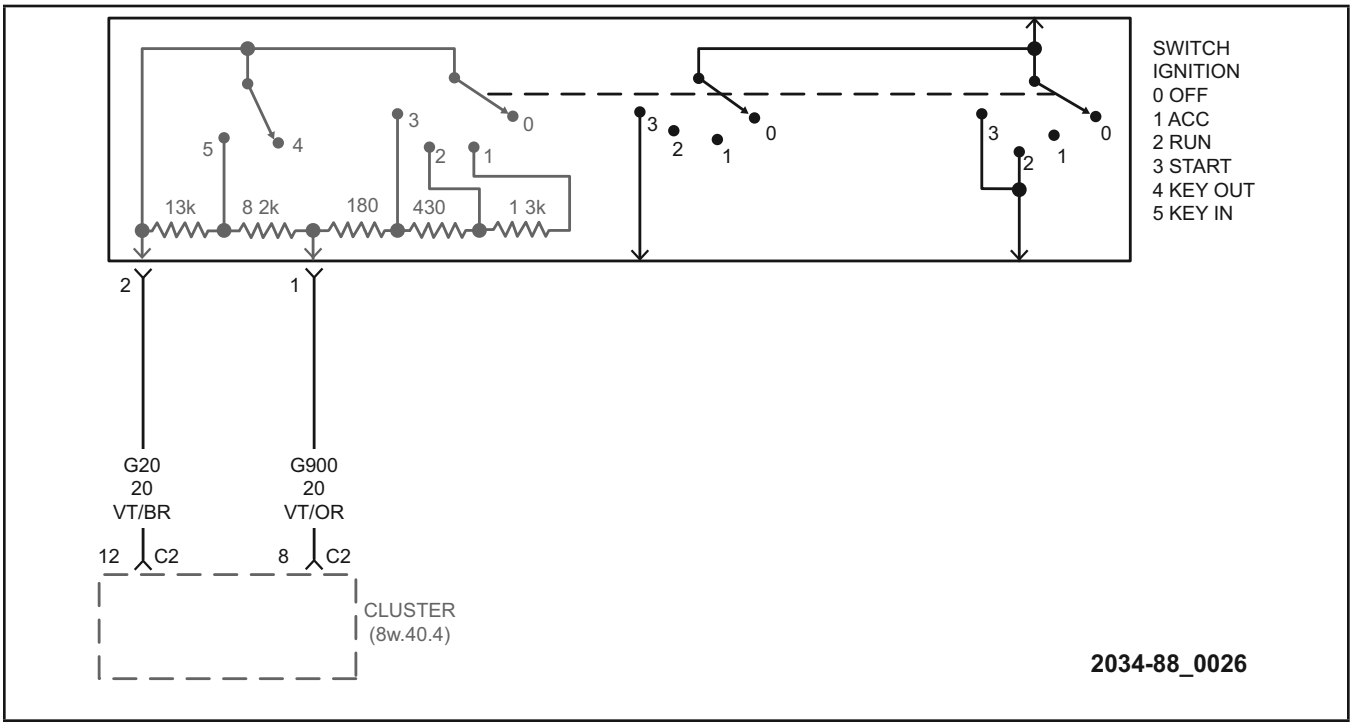

Figure 27 Multi-Position Ignition Switch

Multi-position switches typically have several sets of contacts that send a signal to a controller based on the position of the switch. Some examples of this type of switch are sunroof switches, sunroof slider switches, and some ignition switches.

CARCHIPCARE
https://carchipcare.com
+91 9269969060

Hall-Effect Sensors

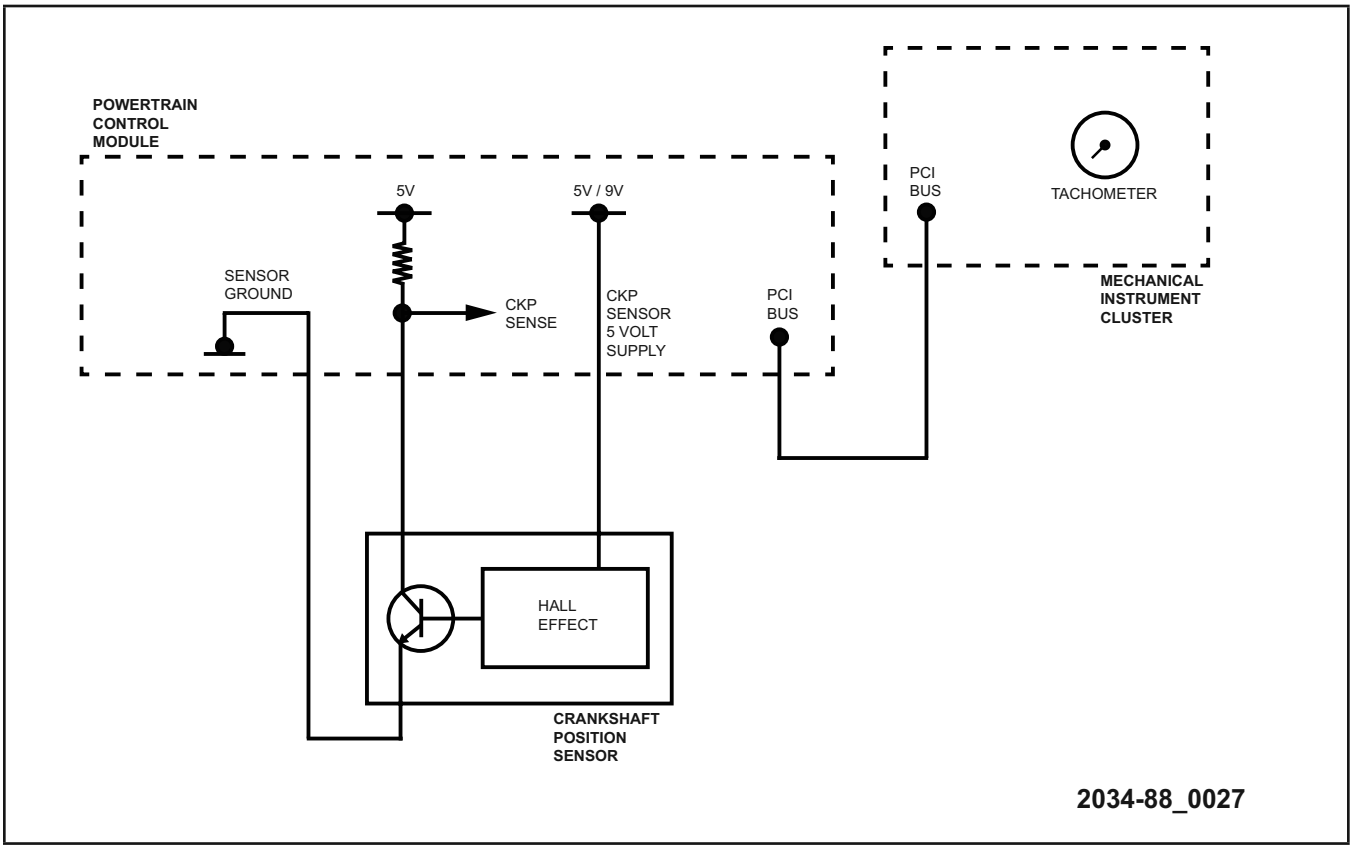

Figure 28 Hall-Effect Crankshaft Position Sensor Circuit

Hall-effect devices are often called sensors, but they are actually switches, because most produce a digital on/off signal. Hall-effect devices can be used to monitor the rotational speed or position of a component.

Hall-effect Devices

- Camshaft and crankshaft sensors
- Vehicle speed sensor
- Position switches
- Obstacle sensors
- Throttle position sensors
- Autostick feature

Hall-effect devices can be either three-wire or two-wire devices. The three-wire devices have a power feed, ground, and a reference voltage supplied by the module. The reference voltage is toggled to ground by the Hall-effect device generating the signal to the module.

The two-wire Hall-effect devices are commonly integrated with another component, and receive their power feed and ground directly from that device. The signal circuit goes to the module. The two-wire Hall-effect devices are commonly used inside window motors, and power seat motors. They are also used to track and report the components position to a module.

CARCHIPCARE
https://carchipcare.com
+91 9269969060

Hall-effect Transistor Off

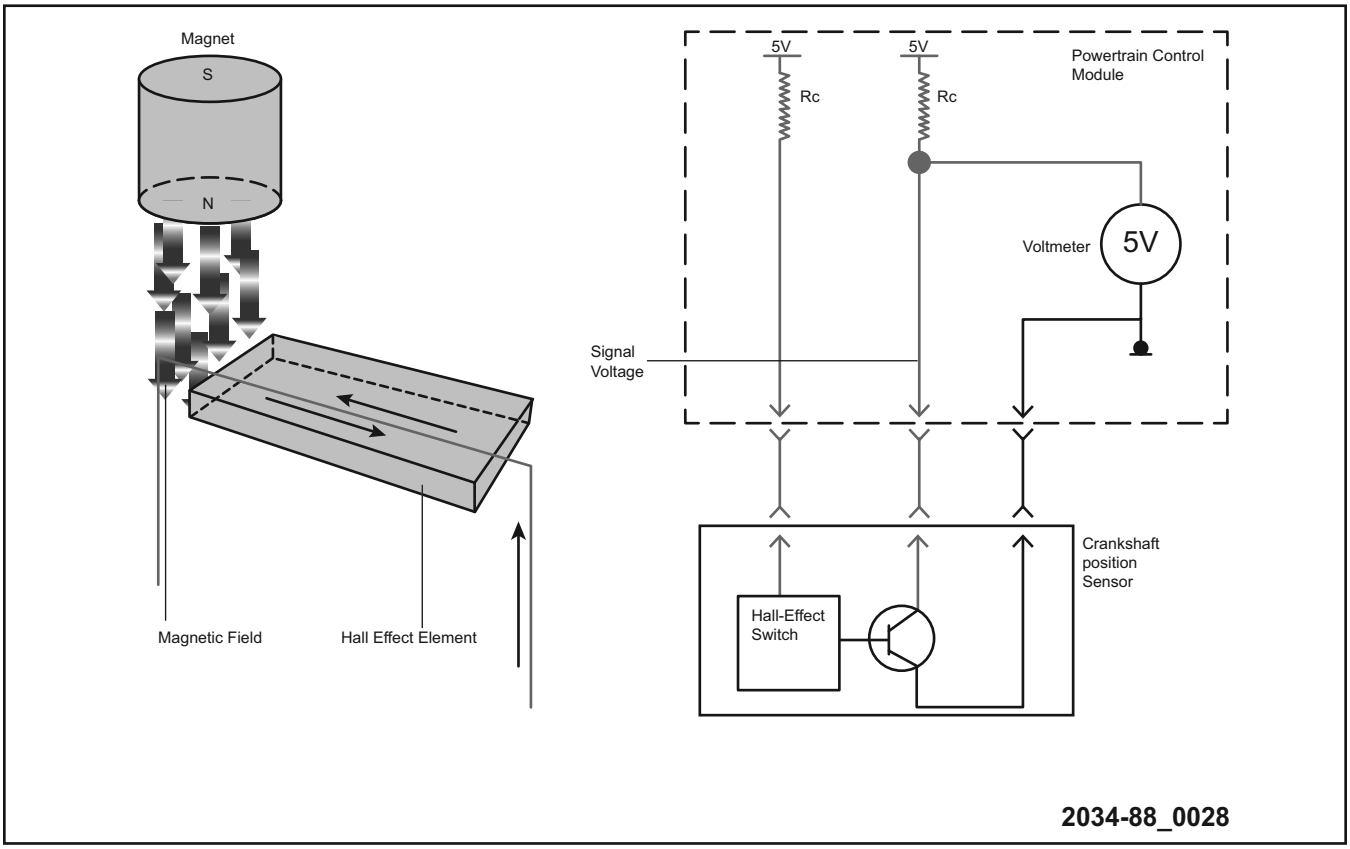

Figure 29 Hall-effect Transistor Off

Hall-effect switches are composed of a magnet and an integrated circuit chip or element. The Hall-effect circuit typically receives a 5-volt supply, 5-volt reference voltage, and ground circuit. The reference voltage causes current to flow through the Hall semiconductor chip in a very specific direction.

When a magnetic field flows through the semiconductor, a Hall-effect voltage is induced in the Hall semiconductor.

The magnetic lines of force must be perpendicular to the semiconductor and to the reference current.

CARCHIPCARE
https://carchipcare.com
+91 9269969060

Hall-Effect Transistor On

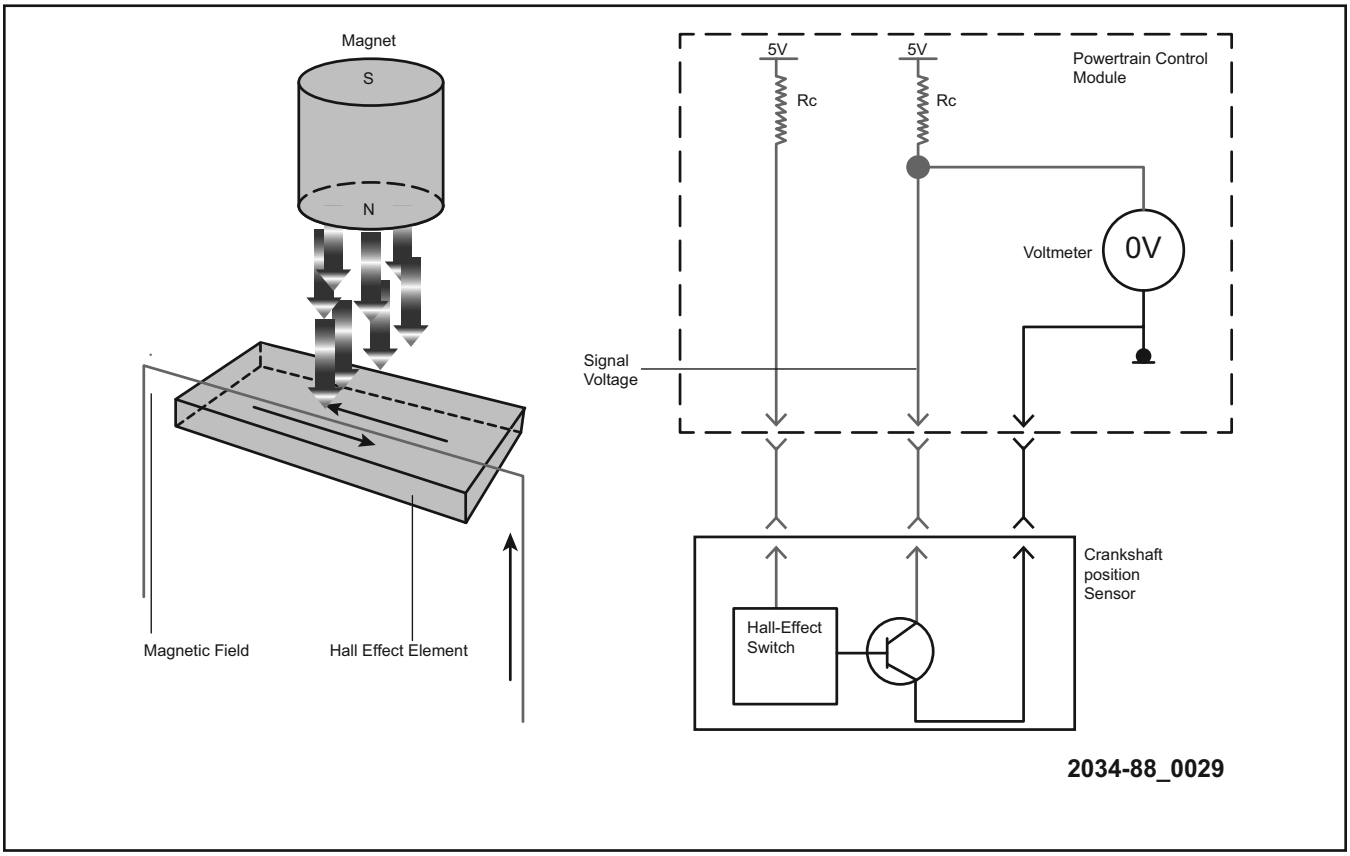

Figure 30 Hall-effect Transistor On

The Hall-effect voltage is used to turn on a transistor. It is important to know that the Hall signal is normally high (5-volts) until the transistor is turned on.

When the transistor is on, it connects the 5-volt signal voltage to ground. This causes the Hall signal voltage to be pulled low to 0-volts.

The magnet does not need to be moving. It simply needs to be positioned so that the lines of force pass through the semiconductor at a right angle. The magnet may be part of the sensor or external to the sensor.

CARCHIPCARE
https://carchipcare.com
+91 9269969060

SENSORS

There are many different sensor designs. Sensors convert some measurement of vehicle operation into an electrical signal. Some sensors are nothing more than a switch that completes the circuit. Others are complex chemical reaction devices that generate their own voltage under different conditions. Repeatability, accuracy, operating range, and linearity are all requirements of a sensor.

Two-Wire Sensors

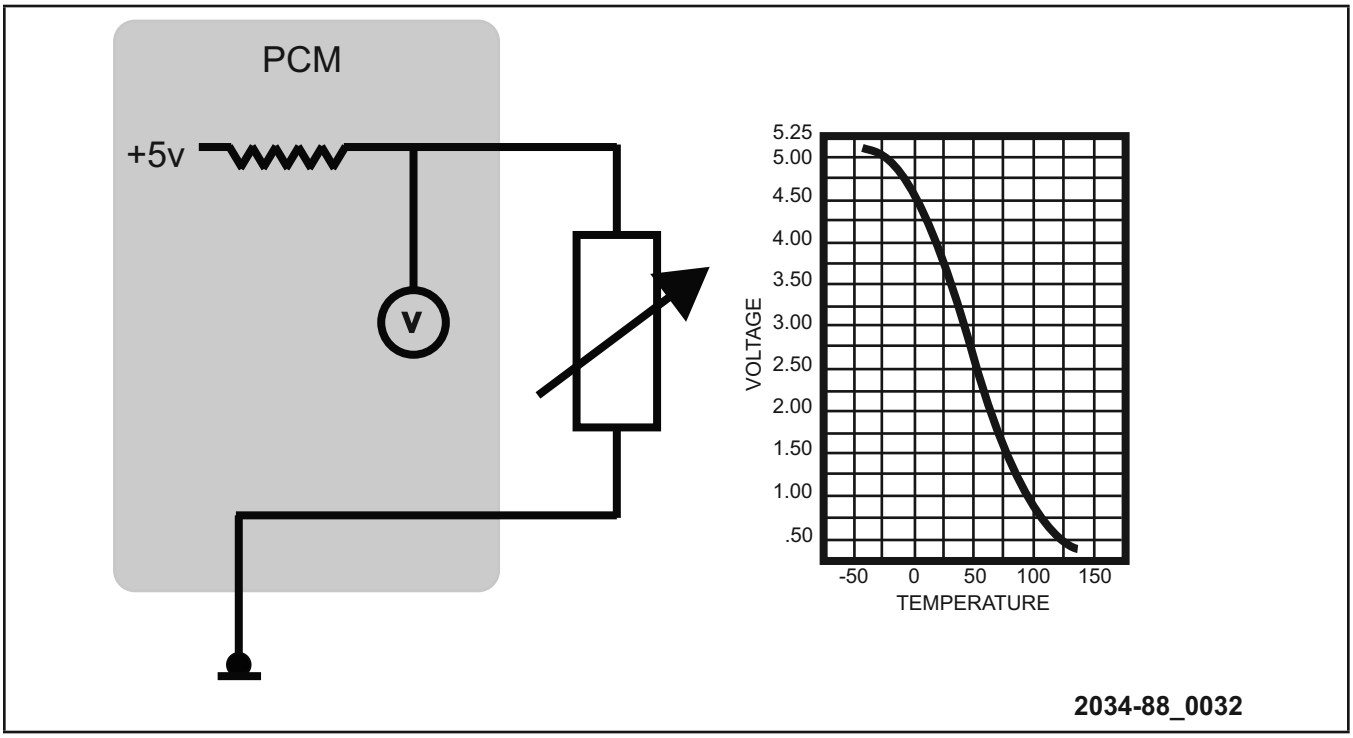

Figure 31 NTC Thermistor

Thermistors are temperature sensitive resistors that have a significant change in resistance with changes in temperature. Thermistors are analog sensors, and sensor resistance varies continuously as temperatures change.

Examples of thermistor applications include:

Engine coolant temperature sensor	Cabin temperature sensor
Ambient temperature sensor	Engine oil temperature sensor
Intake air temperature sensor	Transmission oil temperature sensor
Battery temperature sensor	Evaporator temperature sensors

Typically, most automotive thermistors are negative temperature coefficient (NTC) sensors. Positive temperature coefficient (PTC) sensors also exist, but are seldom used in automotive applications. An example of this would be a PTC temperature sensor that is used on the NAG 1 transmission.

CARCHIPCARE
https://carchipcare.com
+91 9269969060

NTC/PTC Thermistors Cold

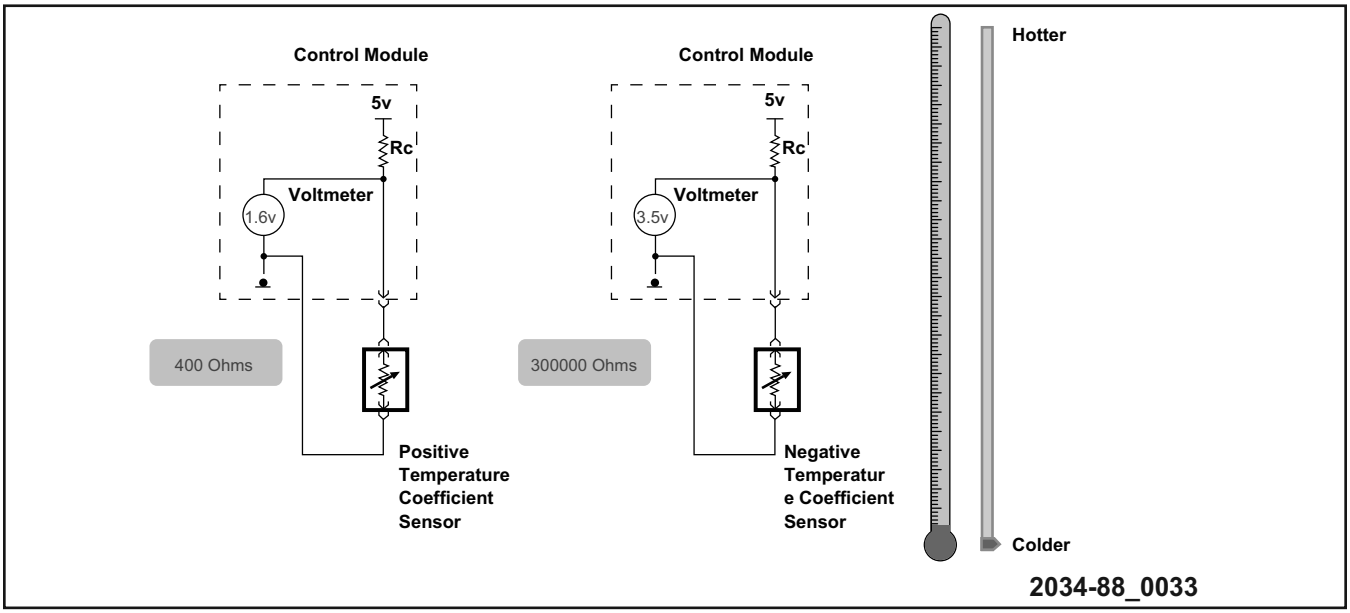

Figure 32 NTC/PTC Thermistors Cold

- The resistance of an NTC devices decreases as temperature increases.
- A decrease in resistance causes the voltage drop across the sensor to decrease, and a decrease in the input signal voltage to the control module.

NTC/PTC Thermistors Hot

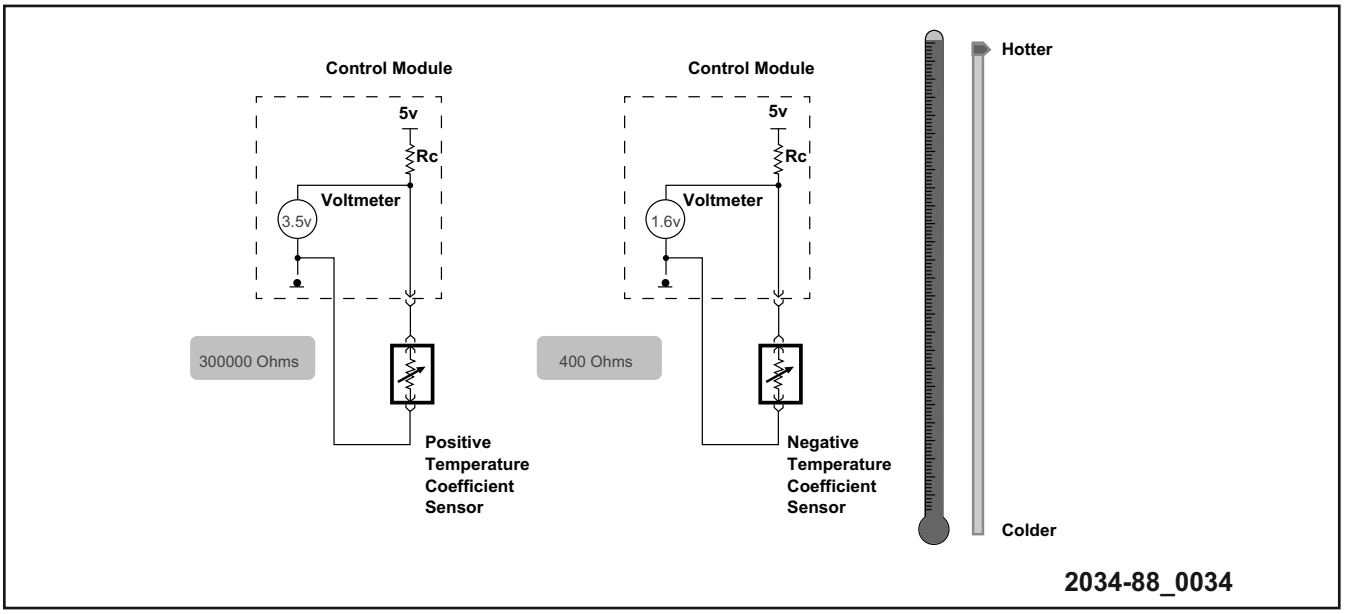

Figure 33 NTC/PTC Thermistors Hot

- The resistance of PTC devices increases as temperature increases.
- An increase in resistance causes the voltage drop across the sensor to decrease, and a increase in the input signal voltage to the control module.

CARCHIPCARE
https://carchipcare.com
+91 9269969060

Sensor Circuit Diagnostic

The control module provides a reference voltage to the thermistor through a fixed-value, current-limiting resistor. The resistor and the sensor form a series circuit known as a voltage divider. The control module circuit acts like a voltmeter to measure the voltage drop across the sensor portion of the circuit. The current-limiting resistor also protects the control module in the event that the sensor circuit is shorted to power or to ground.

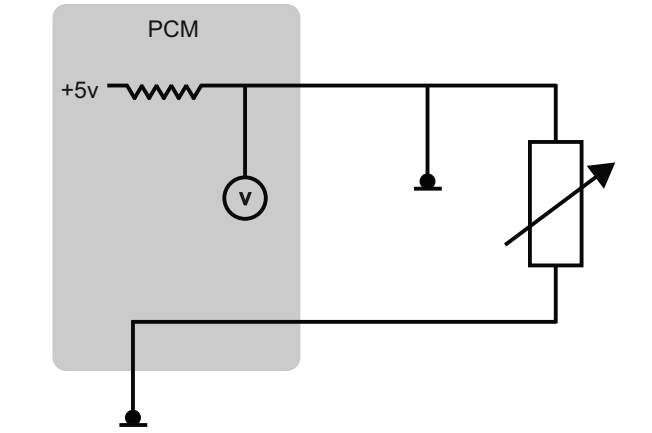

DTC: P0117-ECT SENSOR CIRCUIT LOW
MIL: Illuminated

2034-88_0034

Figure 34 Short to Ground Fault

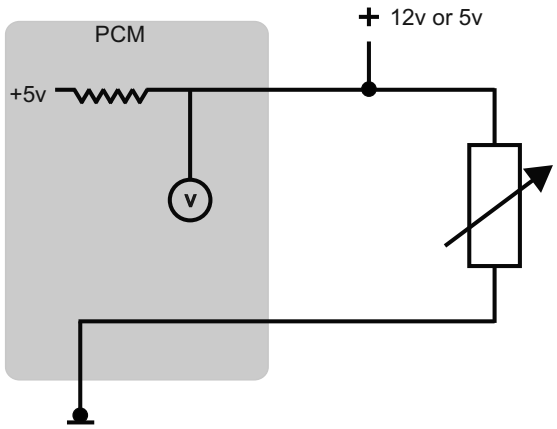

DTC: P0118-ECT SENSOR CIRCUIT HIGH
MIL: Illuminated

Note: An open circuit will produce the same fault

2034-88_0035

Figure 35 Short to Power Fault

CARCHIPCARE
https://carchipcare.com
+91 9269969060

Notes:

CARCHIPCARE
https://carchipcare.com
+91 9269969060

Magneto-Resistive Sensors

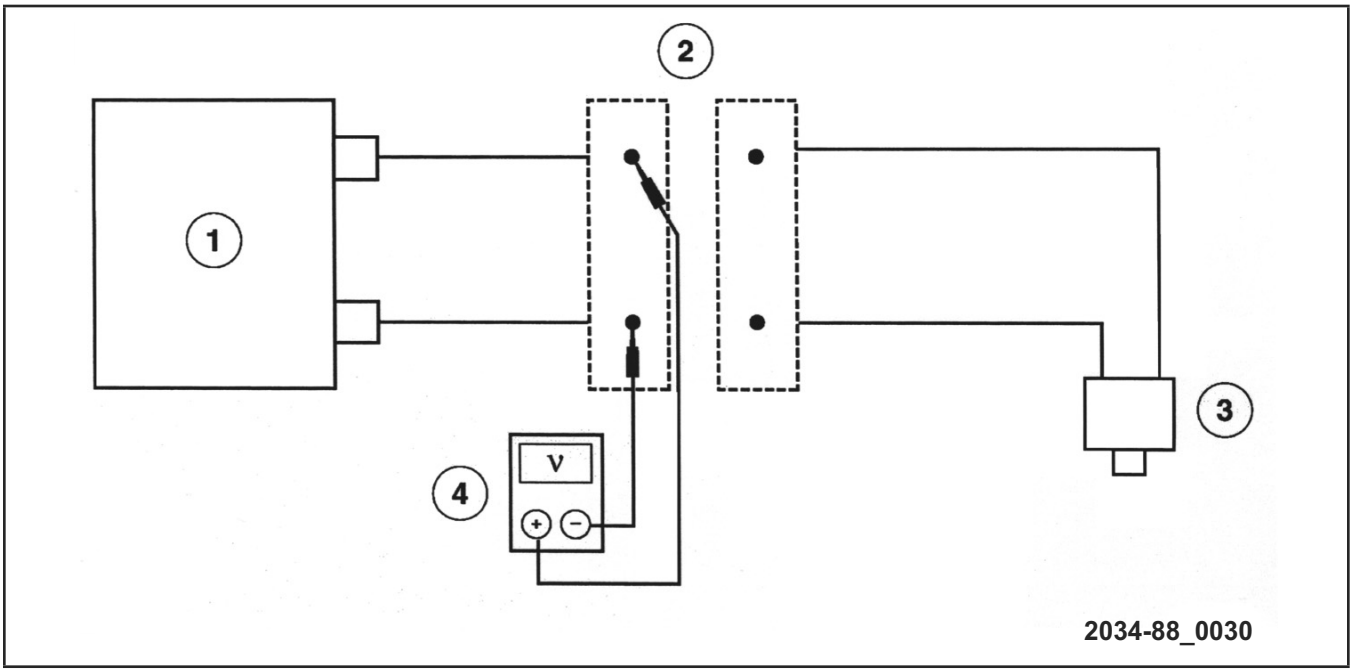

Figure 36 Magneto-Resistive (Active Wheel Speed Sensor Circuit)

Magneto-resistive sensors operate by changing their resistance properties due to a magnetic field. They consist of a magneto-resistive sensor element, a permanent magnet, and an integrated circuit to generate a digital output. Like a Hall-effect devices, they need a supply of voltage to power up the internal electronics. An advantage of magneto-resistive devices is that they can measure a zero speed. This makes them an ideal application for anti-lock brake system(ABS) wheel speed sensors. Early ABS wheel speed sensors used a magnetic pulse generator whose signal would drop out at very low speeds. Other applications of this technology include seat belt latches.

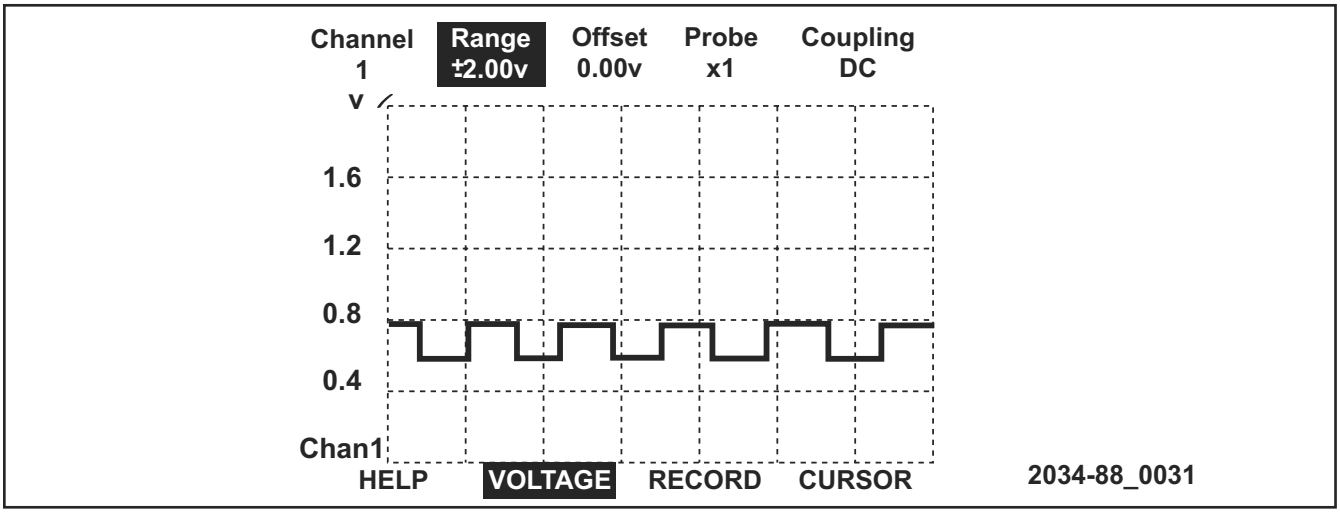

Figure 37 Magneto-resistive Sensor Scope Pattern

CARCHIPCARE
https://carchipcare.com
+91 9269969060

Notes:

CARCHIPCARE
https://carchipcare.com
+91 9269969060

Three-Wire Sensors

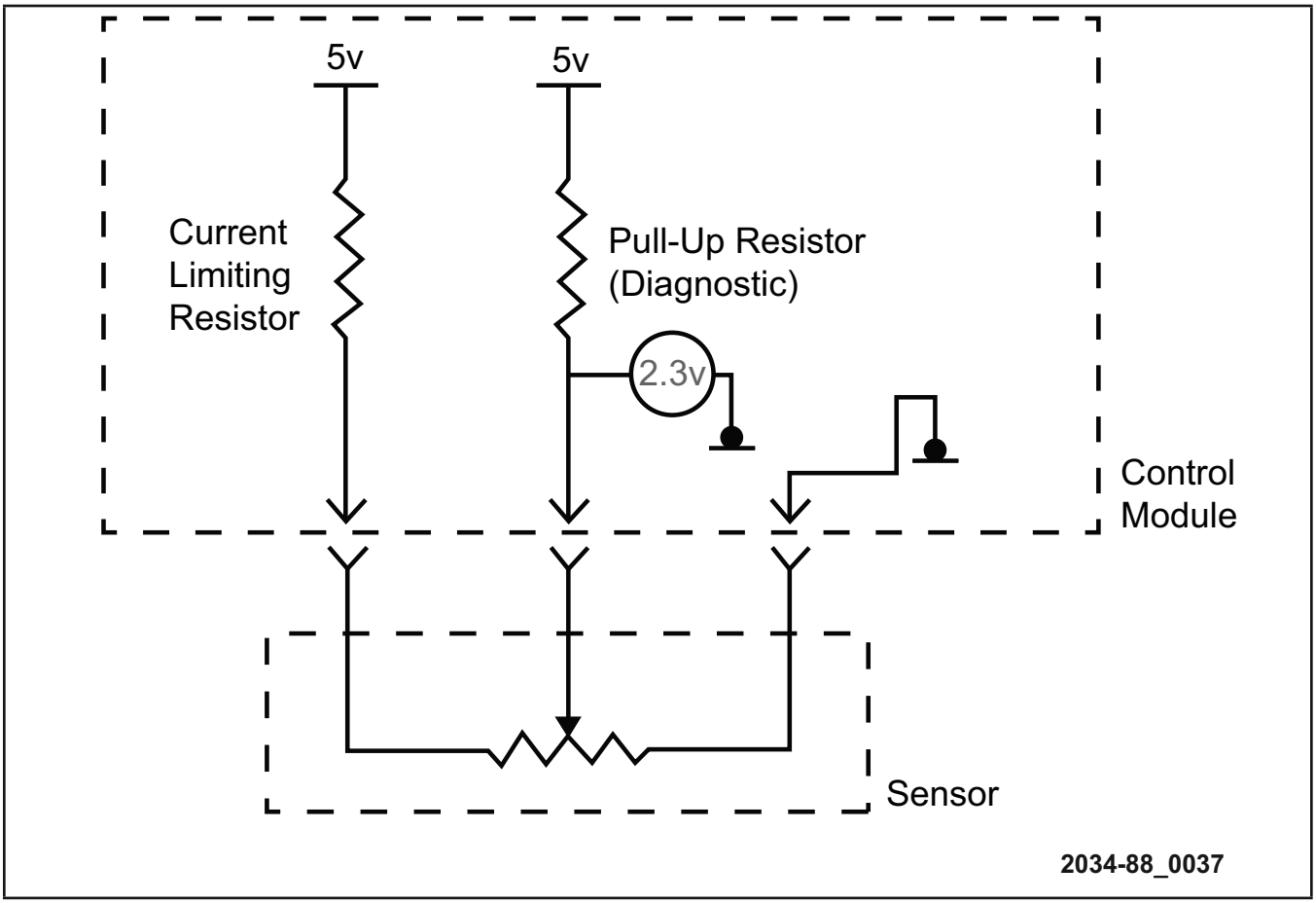

Figure 38 Typical Sensor Diagnostic Circuit

In addition to two-wire sensors, there are a number of three-wire sensors used. Like the two-wire sensor circuits, three-wire sensors are voltage dividers. The control module sends out a power supply to feed one side of the resistor and grounds the opposite end. Depending on the type of sensor, the reference voltage sends a varying voltage signal based on position, pressure, absolute pressure, or atmospheric pressure.

There are several three-wire sensor applications that are used to measure position. This type of sensor is called a potentiometer. These include:

- Throttle position sensors (TPS)
- HVAC mode door feedback sensors
- EGR position sensors
- Seat, mirror, and steering column position sensors

There are also a number of three-wire pressure sensors:

- Manifold absolute pressure (MAP) sensor
- Throttle input sensor (TIP) used on turbo-equipped vehicles

A/C pressure sensor

CARCHIPCARE
https://carchipcare.com
+91 9269969060

Notes:

CARCHIPCARE
https://carchipcare.com
+91 9269969060

Voltage Generating Sensors

Piezoeletric sensors are capable of generating their own voltage.

Oxygen Sensors

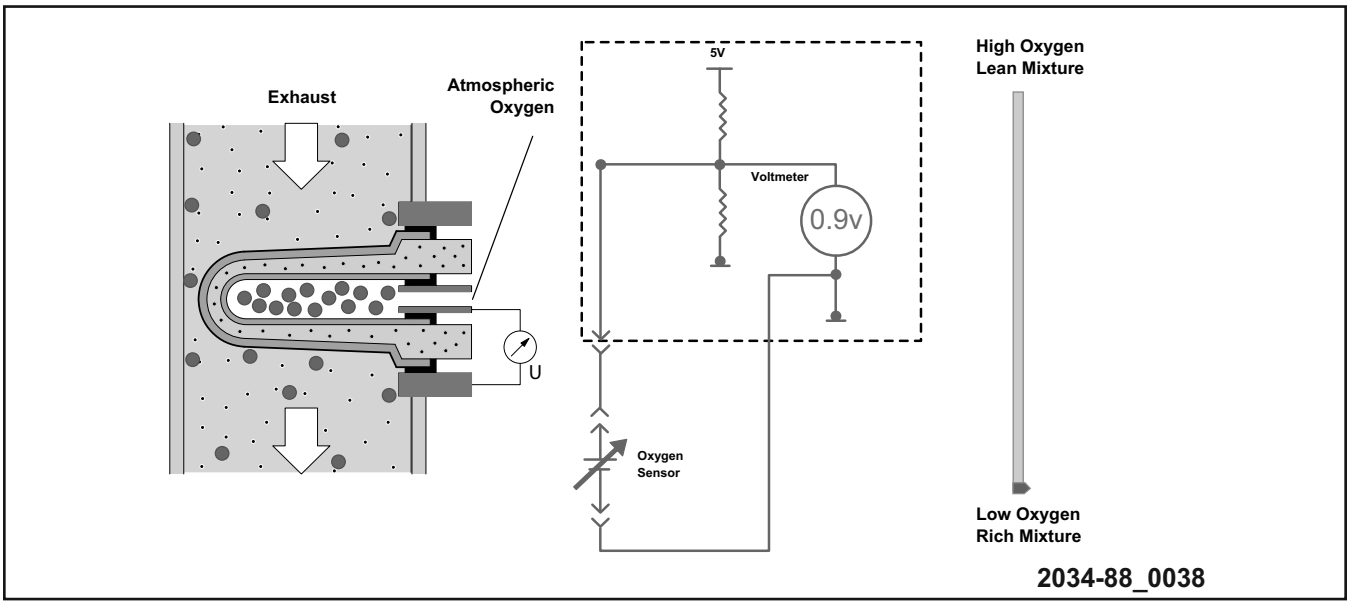

Figure 39 Low Oxygen Content in the Exhaust

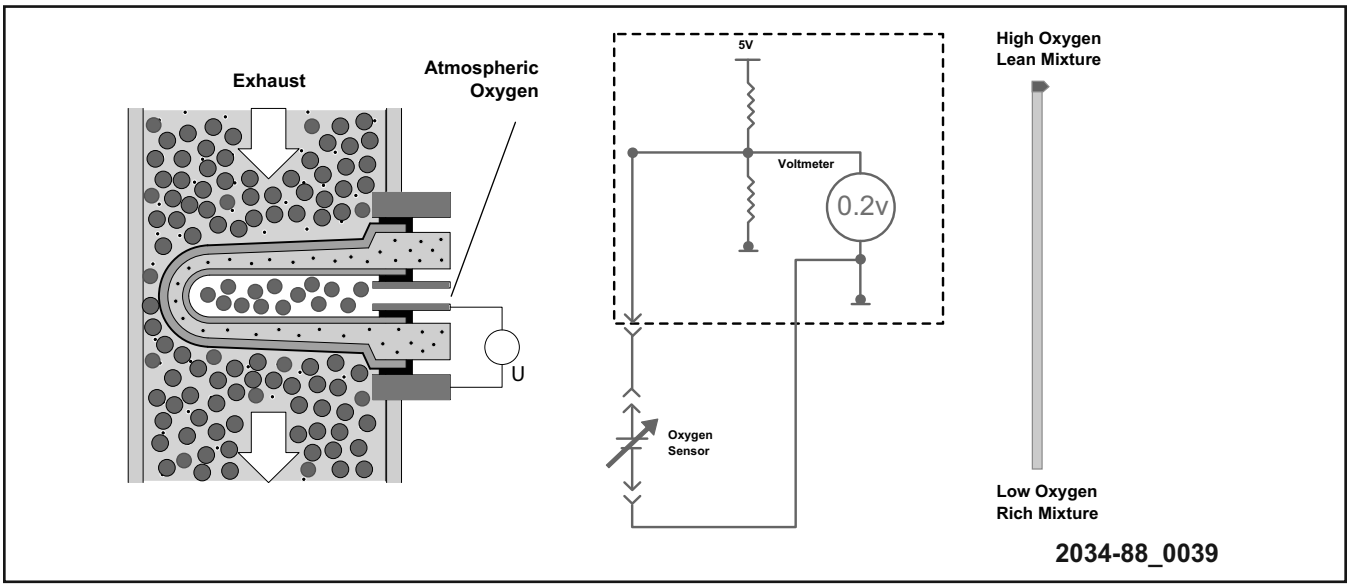

Figure 40 High Oxygen Content in the Exhaust

Oxygen sensors generate a voltage signal based on the amount of oxygen in the exhaust stream compared to the amount of oxygen in the ambient air. As oxygen levels in the exhaust increase, the voltage signal produced decreases. As oxygen levels decrease in the exhaust, the voltage produced increases.

CARCHIPCARE
https://carchipcare.com
+91 9269969060

Piezoelectric/piezoresistive Sensors

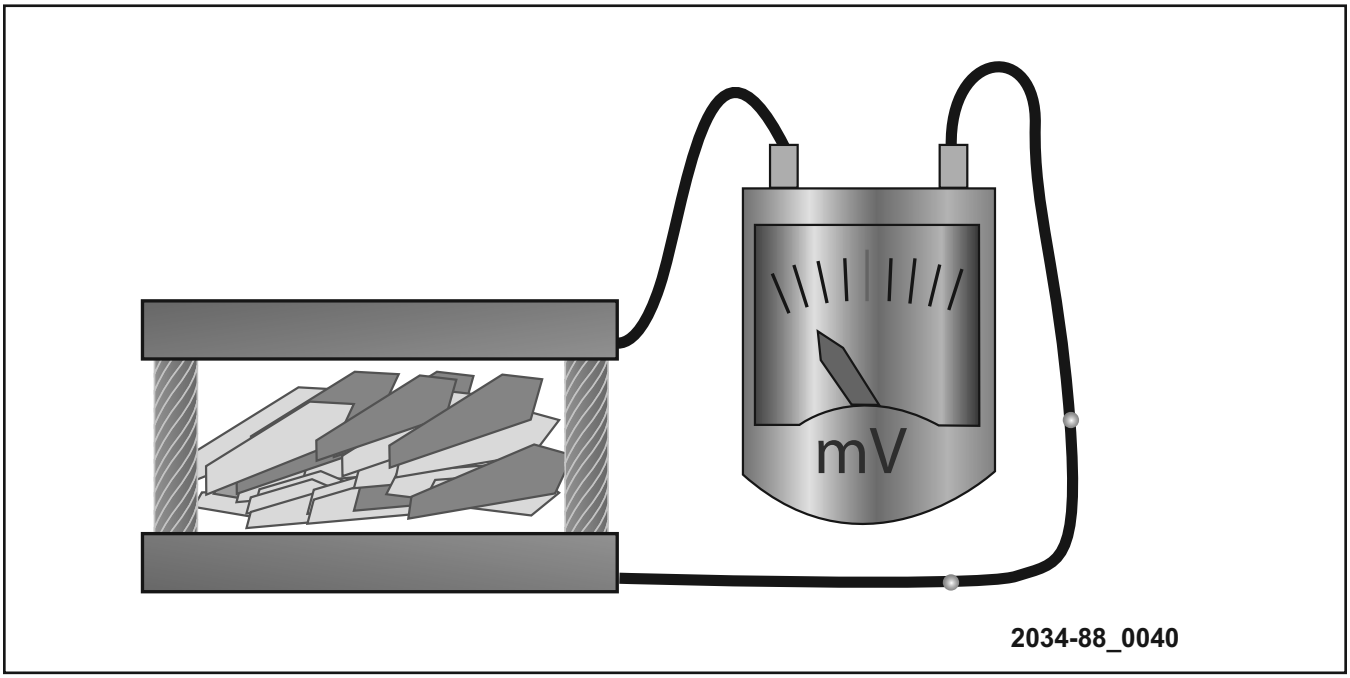

Figure 41 No Increase in Pressure Detected (No Detonation)

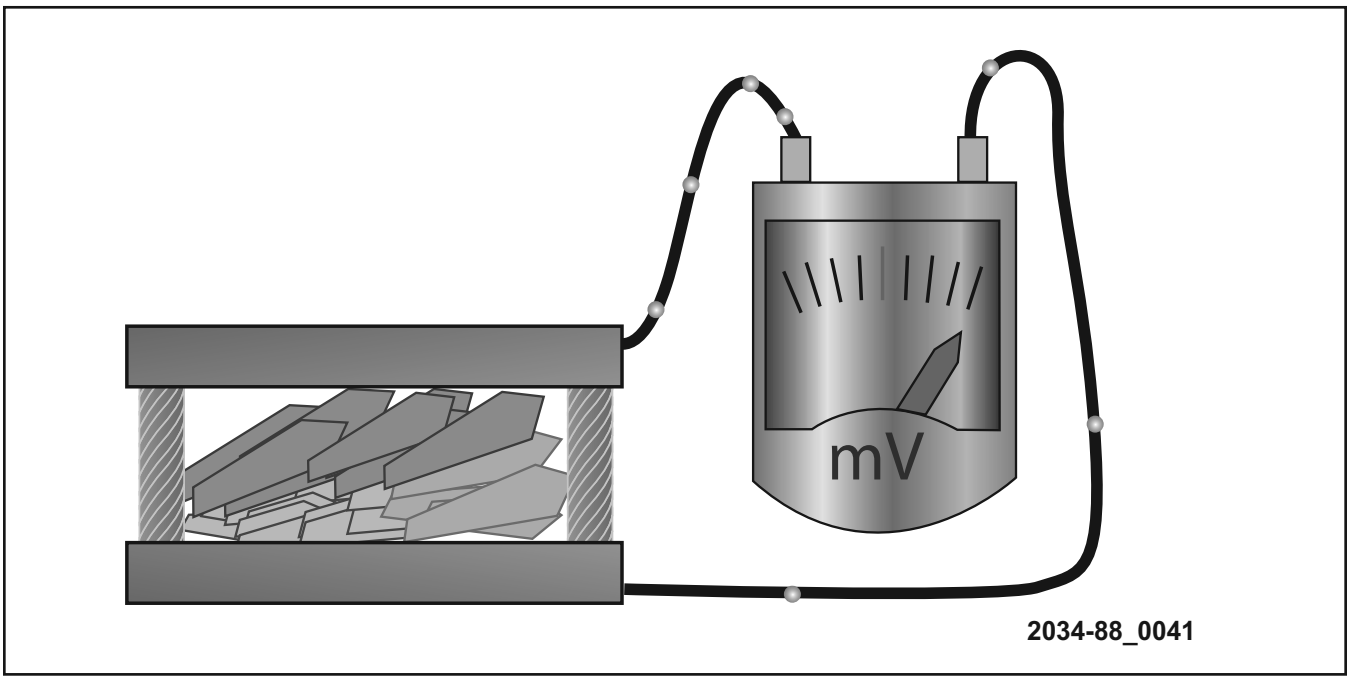

Figure 42 Pressure Increase Detected (Detonation)

Piezoelectric/piezoresistive sensors contain a crystalline material such as quartz, Rochelle salt, or some ceramics. When the crystal is subjected to pressure, a voltage is produced. The greater the force applied to the crystal, the greater the voltage. Applications include knock sensors, G-sensors, and accelerometers.

CARCHIPCARE
https://carchipcare.com
+91 9269969060

Speed Sensors

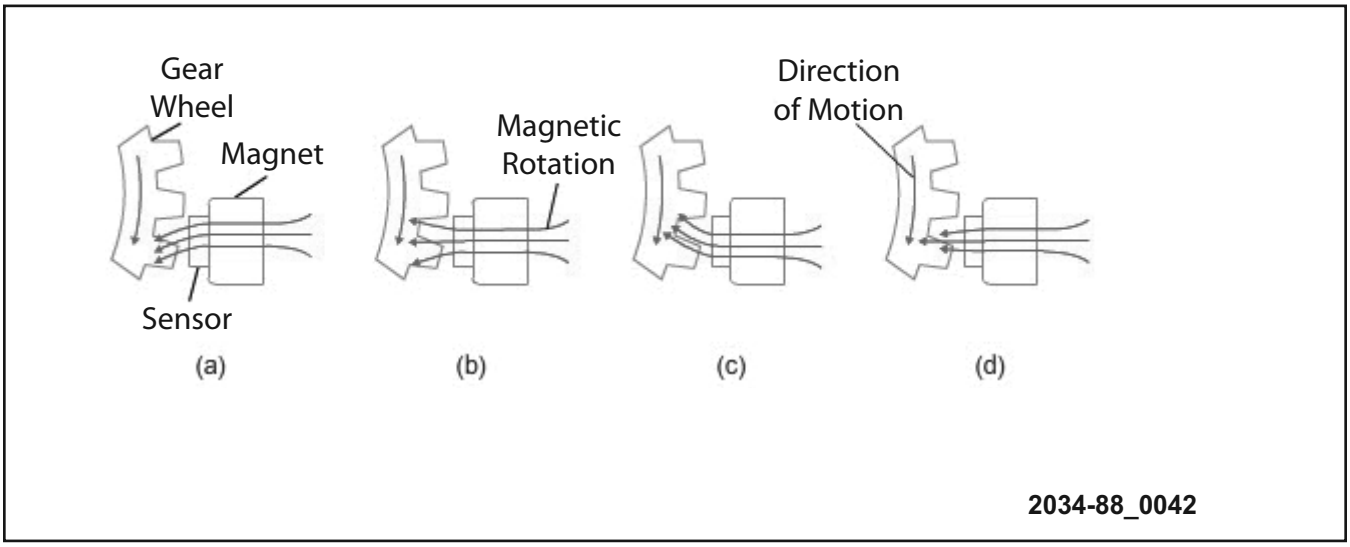

Figure 43 Inductive Magnetic Pickup Sensor

Inductive magnetic pickup sensors consist of a permanent magnet surrounded by a coil winding. Moving a piece of iron or steel near the magnet can alter the strength of the magnetic field. The sensor is mounted very close to a toothed ring, sometimes called a tone wheel, which rotates. As the metal teeth approach the magnet, it generates a positive AC voltage. As it moves away from the magnet, a negative voltage is induced.

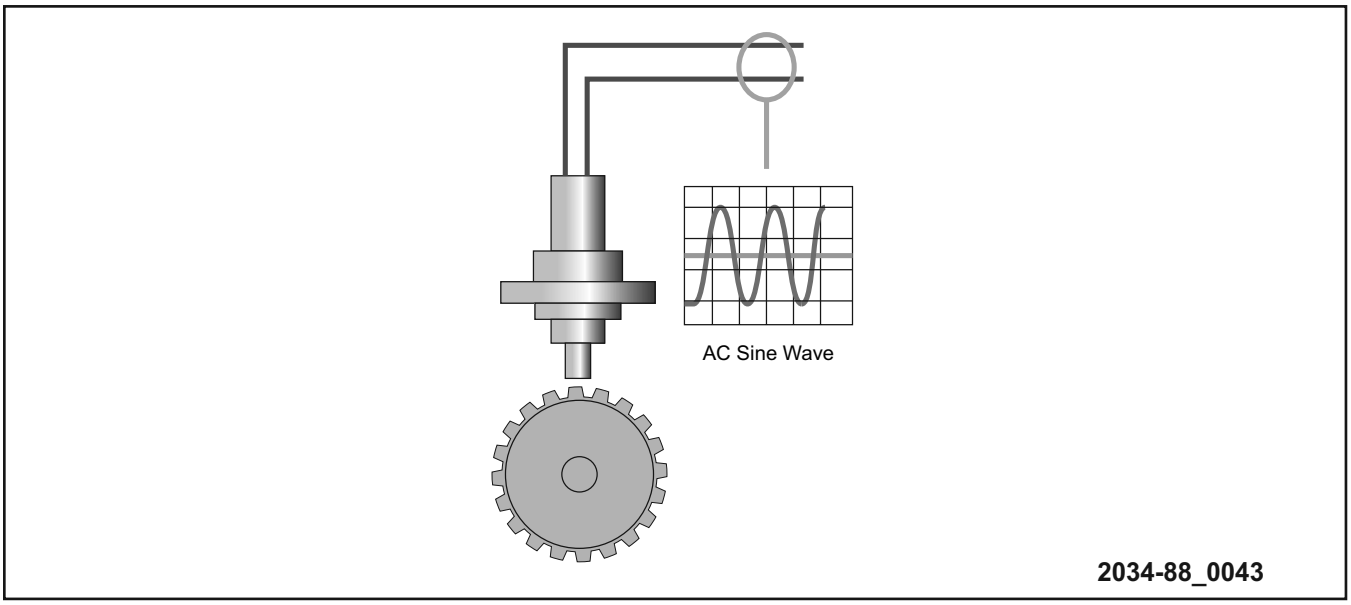

Figure 44 Magnetic Pickup

Inductive sensors are very simple, but the amplitude of the induced voltage signal (the magnitude of the voltage, or the height of the waveform) varies with the speed of rotation of the tone wheel. There must be relative motion between the tone wheel and sensor. The signal may be weak at low rotation speeds and/or wide air gaps. This is why manufacturers have moved away from using them for ABS wheel speed sensors and have moved in the direction of the previously discussed magneto-resistive sensor technology.

CARCHIPCARE
https://carchipcare.com
+91 9269969060

AC Voltage Scope Pattern

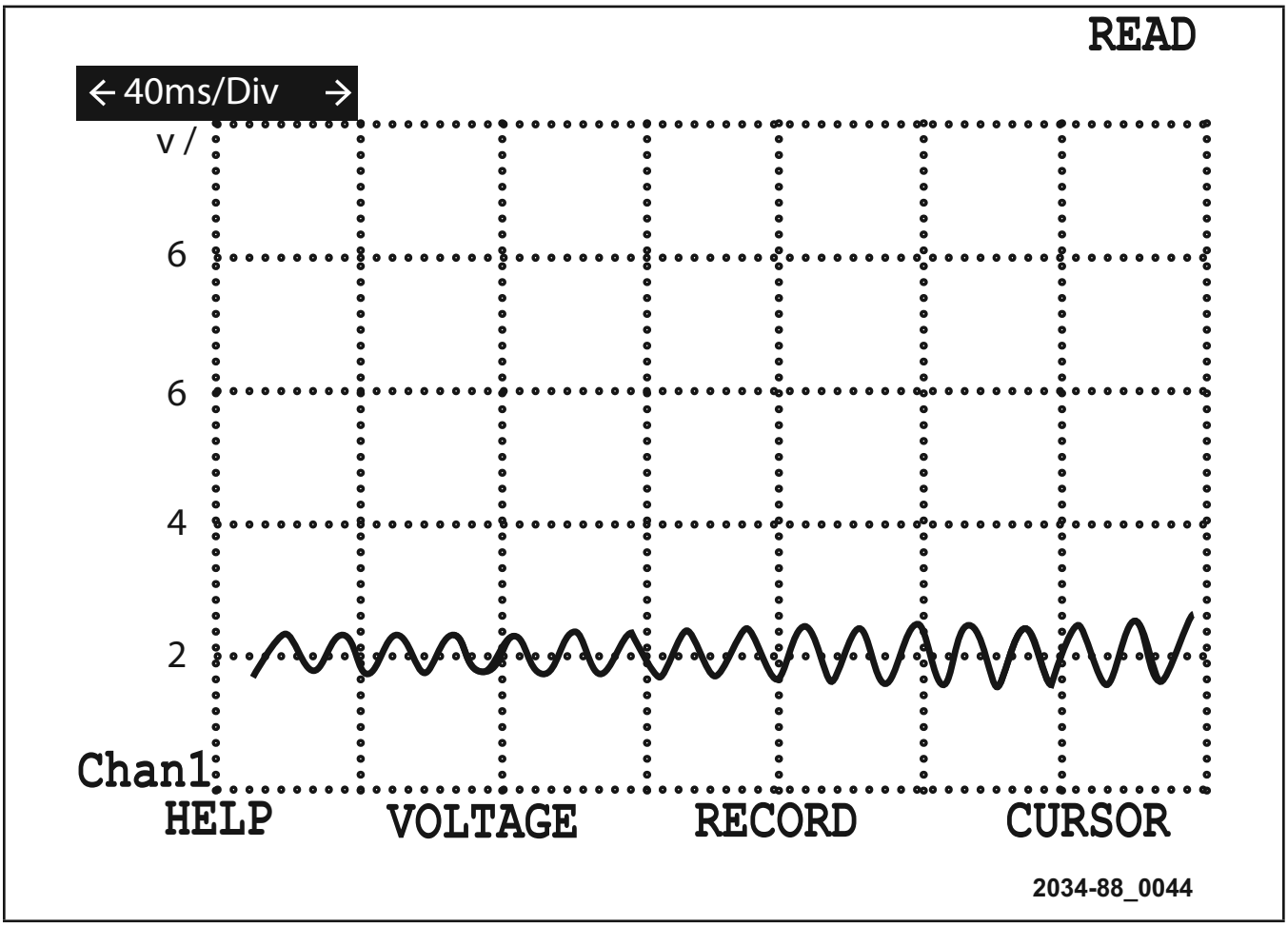

Figure 45 Fluctuating AC Voltage

An inductive magnetic pickup sensor can be tested using an ohmmeter to check for continuity through the sensor windings, and with an alternating current (AC) voltmeter to check for AC voltage generation while rotating.

In the graphic, an oscilloscope has been placed across the circuit to measure the AC signal.

CARCHIPCARE
https://carchipcare.com
+91 9269969060

PHOTO SENSORS

Photo Sensors Symbols

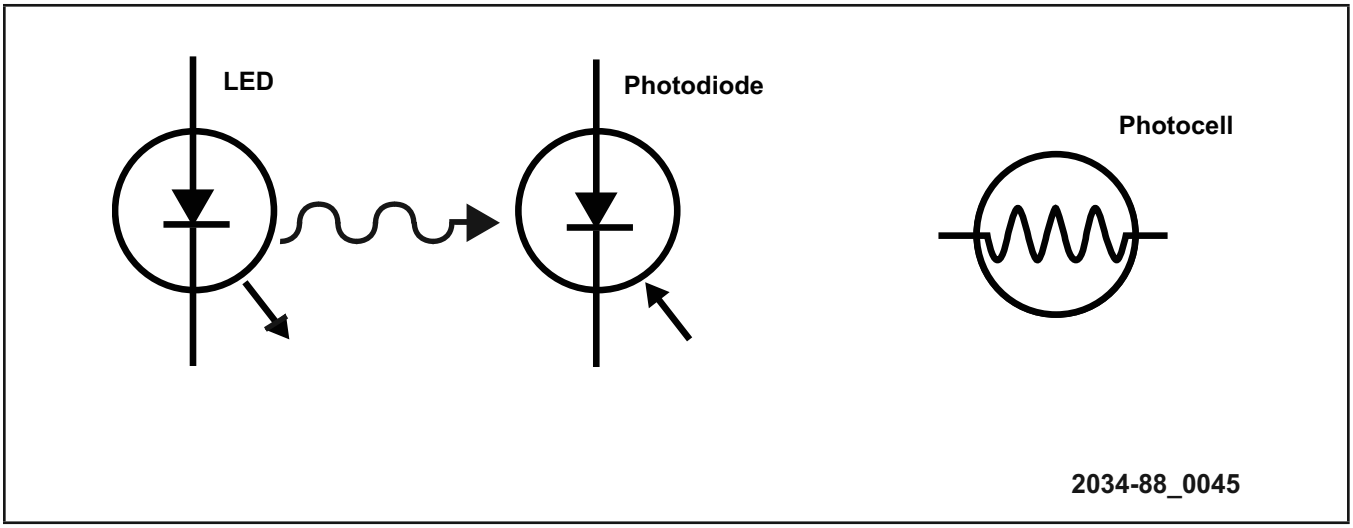

Figure 46 Various Photo Sensor Symbols

Photo sensors typically use light-emitting diodes (LEDs) and photo diodes to control a reference voltage. Typically a disk or wheel with slots alternately blocks and passes the light from the LEDs. When the photo diodes sense light, they become conductive and pull the reference voltage low to 0-volts.

- Self-dimming mirror sensor
- Sun sensor
- Lift gate sensor
- Steering angle sensors
- Rain sensor

CARCHIPCARE
https://carchipcare.com
+91 9269969060

Photocell

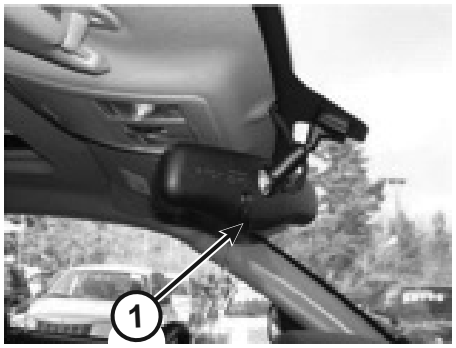

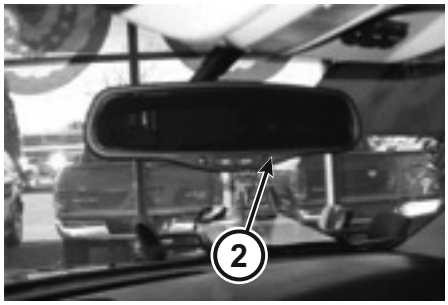

2034-88_0046

1	Ambient Light Photocell	2	Glare Sensing Photocell

Figure 47 Auto-Dimming Rear View Mirror

Photocells are used to control auto-dimming mirrors that reduce glare when the light intensity from the rear of the vehicle differs from the ambient light level enough to be hazardous to the driver. An ambient light photocell sensor is located on the rear view mirror housing. This photocell detects ambient light levels outside of the vehicle. The photocell is located on the rear view mirror face. This photocell detects the level of light received by the rear view mirror. When the circuit detects a difference between the two light levels, it begins to darken the rear view mirror.

CARCHIPCARE
https://carchipcare.com
+91 9269969060

Notes:

CARCHIPCARE
https://carchipcare.com
+91 9269969060

Notes:

CARCHIPCARE
https://carchipcare.com
+91 9269969060

LESSON 3 MODULE OUTPUTS

OUTPUT CONTROLS

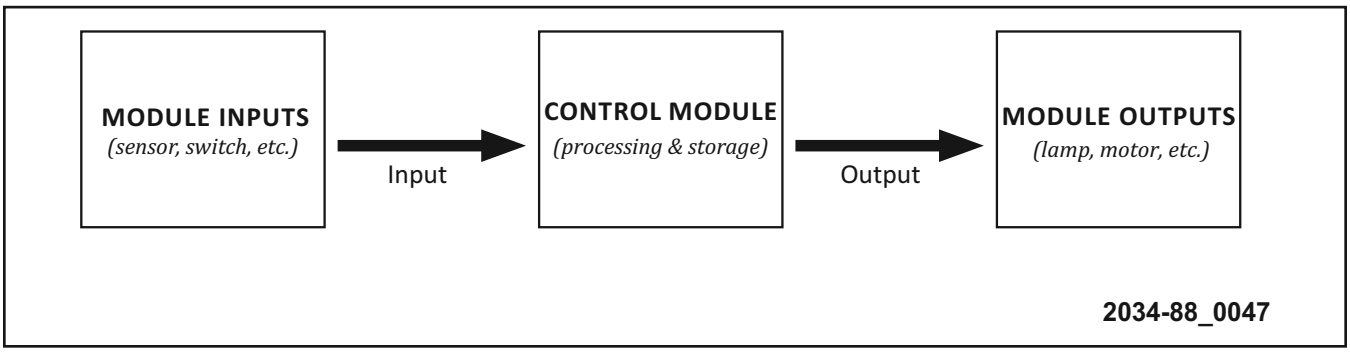

Figure 48 Output Processing

Output controls are a result of the comparison between inputs and programmed parameters within a control module. The control module instructs the correction or adjustment to be made in the controlled system; an output signal is sent to a control device. This results in translating electronic signals into mechanical motion. In this lesson, we will explain different types of output devices and how modules control them.

CARCHIPCARE
https://carchipcare.com
+91 9269969060

Mechanical Relays

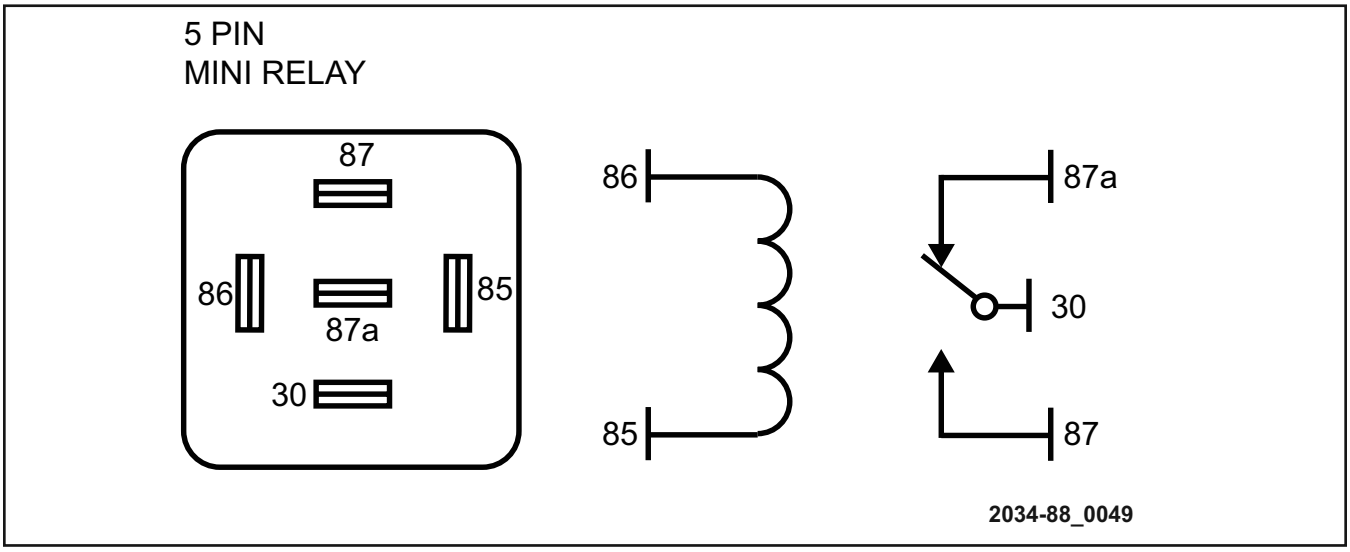

Figure 49 Five-Pin Relay

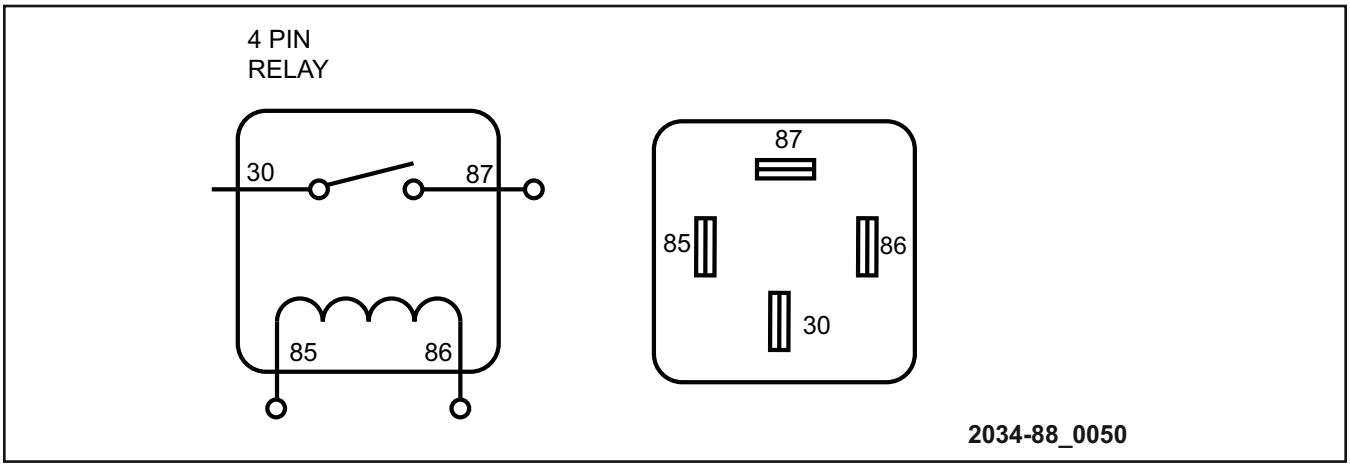

Figure 50 Four-Pin Relay

Many of our load devices are controlled by relays that use low current to control a high-current circuit. Low current is used to energize the electromagnetic coil, while high-side current is able to pass through the relay contacts. Relays have two separate circuits, the low-current control circuit and the high-current output circuit. The control circuit is a small electromagnet. When current is applied to the coil, the magnetic field causes the contacts to close, which allows a higher current to flow. In a typical application, voltage is applied to one end of the coil, and a module supplies a ground. A diode or resistor is placed in parallel across the coil to absorb voltage spikes when the coil is de-energized. This gives the induced current from the collapsing magnetic field an alternate path to flow, preventing damage to the module from a several-hundred-volt spike.

Note: **Terminals 30, 87a, and 87 make up the output side of the relay, which controls the load device. In a de-energized state, terminals 30 and 87a are closed. When energized, terminals 30 and 87 are closed. The four-pin relays do not have an outside pin for terminal 87a.**

CARCHIPCARE
https://carchipcare.com
+91 9269969060

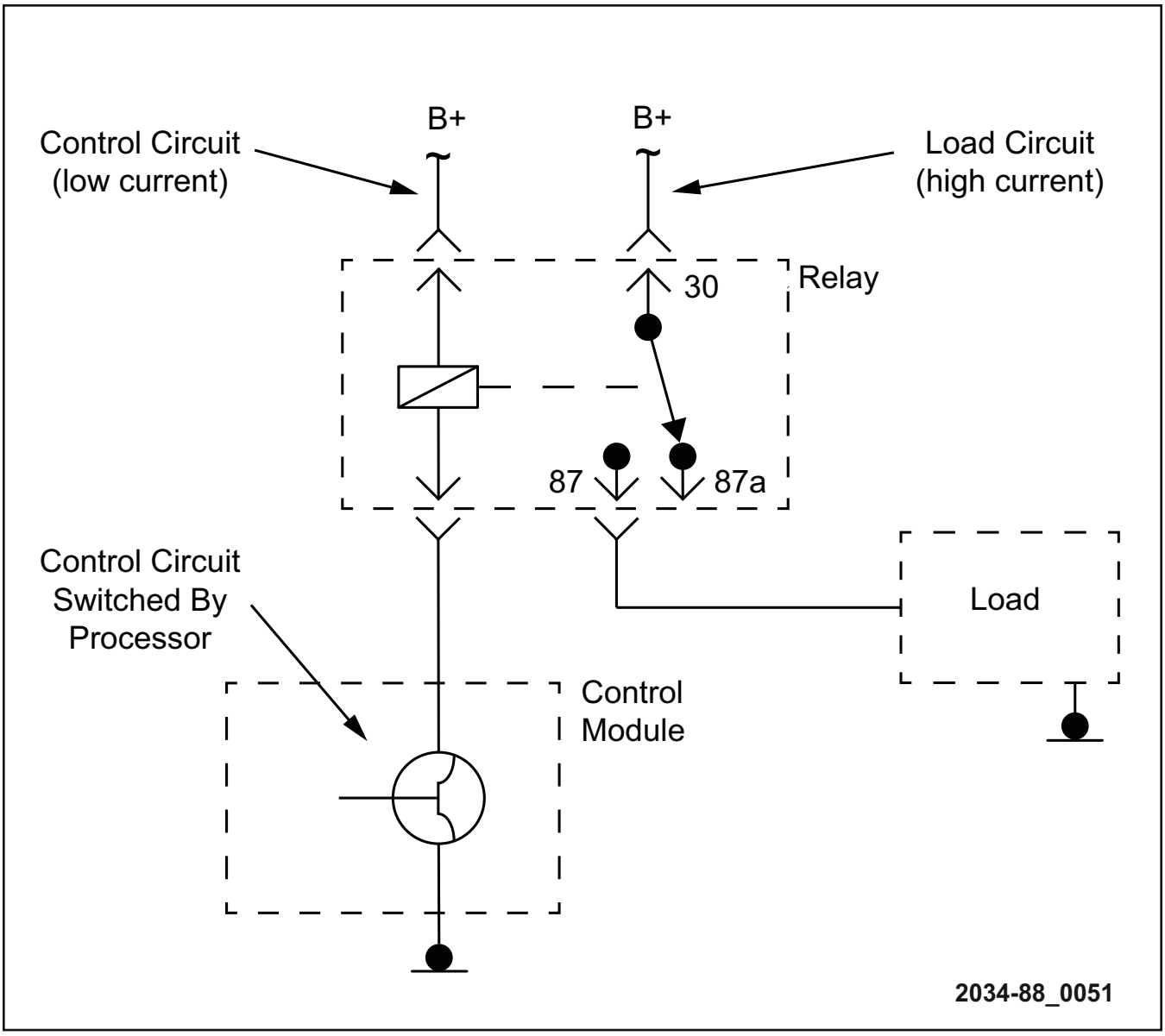

Figure 51 Sample Relay Application

CARCHIPCARE
https://carchipcare.com
+91 9269969060

Notes:

CARCHIPCARE
https://carchipcare.com
+91 9269969060

Diodes

A semiconductor is a material or device that can serve as a conductor or an insulator. Semiconductors have no moving parts; therefore, they seldom wear out. Semiconductors, or solid-state devices, are small, require little power to operate, are reliable, and generate very little heat. Exposure to excessive current or heat will affect semi-conductor performance. For all these reasons, semiconductors are being used in many automotive electronic applications.

Bias Diode

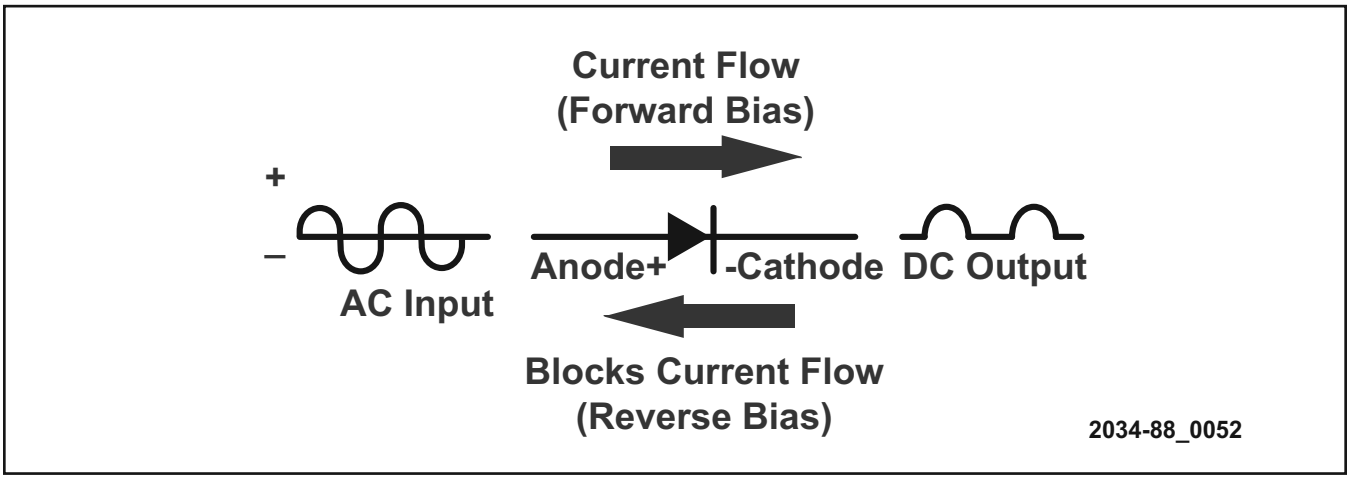

Figure 52 Forward/Reverse Biased Diode

Diodes are an electrical one-way check valve. A simple silicone diode allows current to flow in one direction (forward biasing) while they prevent current flow in the opposite direction (reverse biasing). Diodes do not allow current to flow until a specific voltage threshold has been crossed. At this point, it becomes a conductor. The positive side of the diode is called the anode, the negative side is called the cathode. Current flows from the anode to the cathode.

Zener Diodes

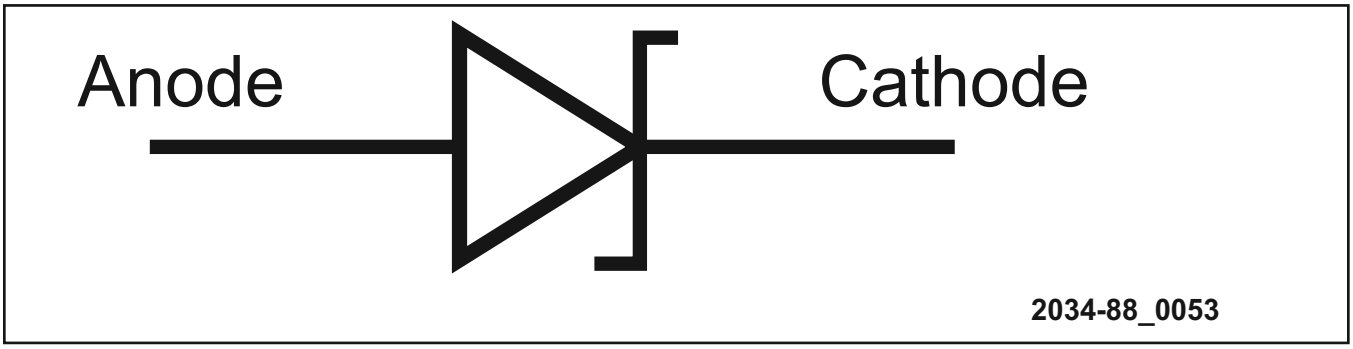

Figure 53 Zener Diodes

A Zener diode is a special type of diode that is often used to regulate voltage. The Zener diode is reversed biased, preventing the flow of current until a voltage threshold has been exceeded. At this point, it becomes forward biased, bleeding off excessive voltage to maintain the specified voltage for that circuit. Zener diode can fail when and allow current to flow in two directions. This can cause AC ripple within the charging system. Zener diodes are rated by threshold voltage.

CARCHIPCARE
https://carchipcare.com
+91 9269969060

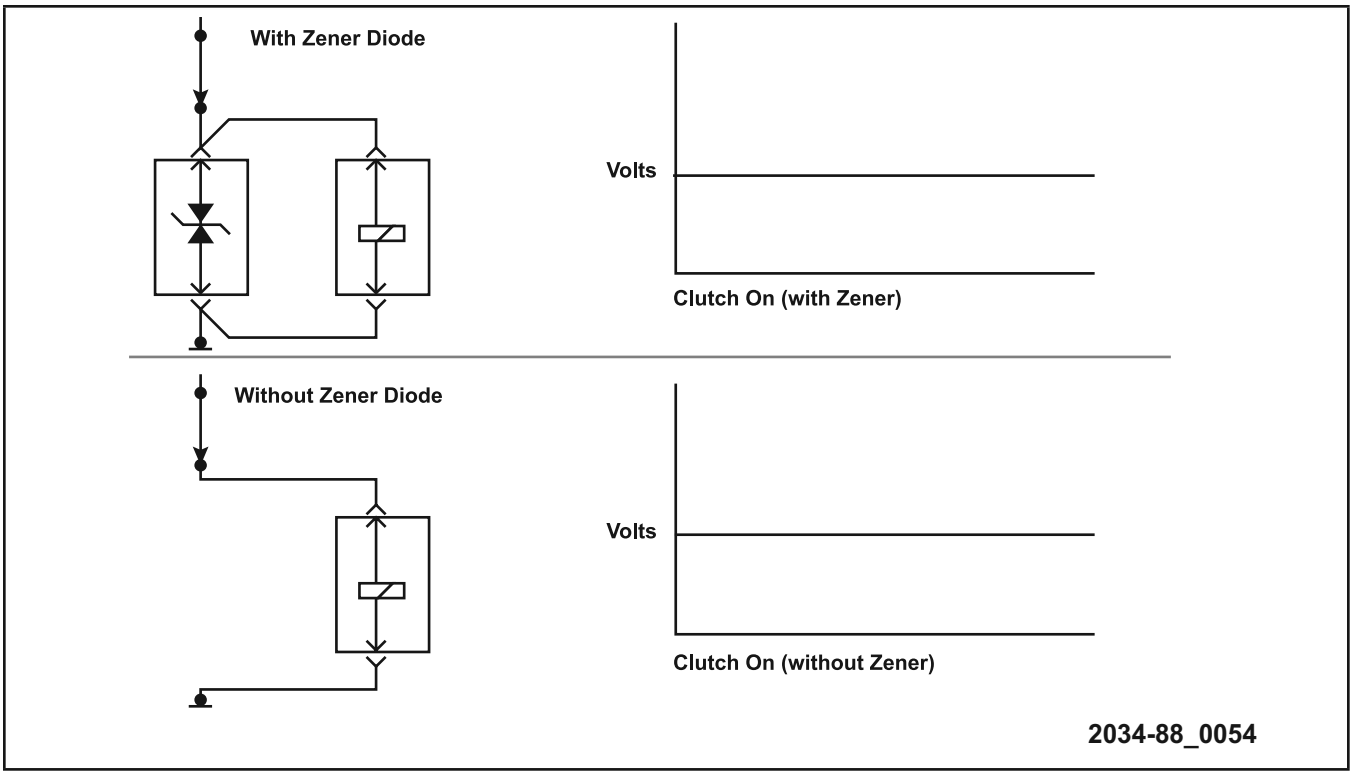

Figure 54 Current Flowing

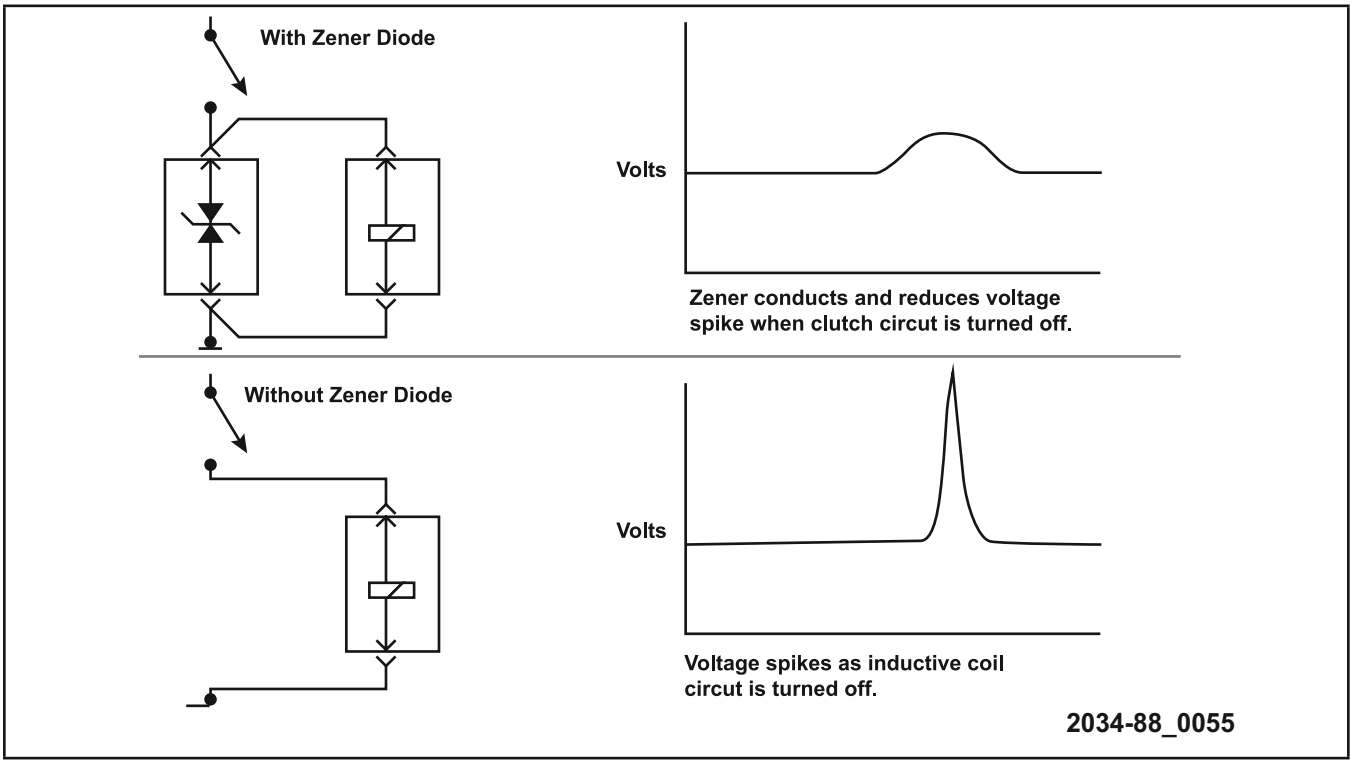

Figure 55 Current Interrupted

CARCHIPCARE
https://carchipcare.com
+91 9269969060

Light-emitting Diodes

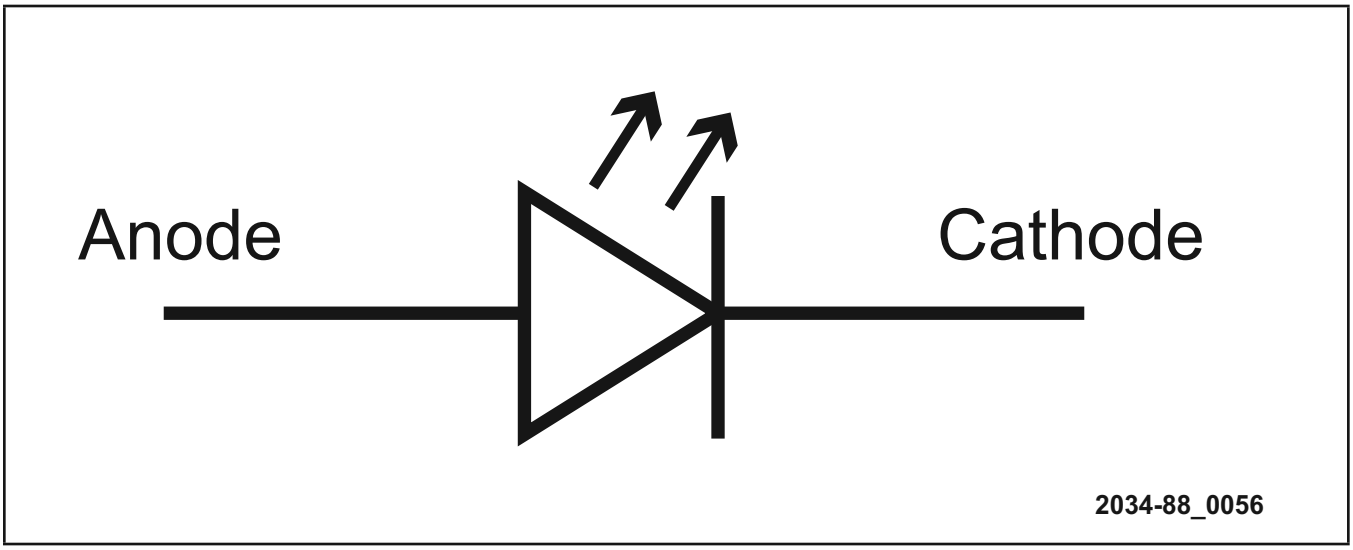

Figure 56 Light-emitting Diode

Another common diode is the LED. This type of diode emits light when it becomes forward biased. The material of which it is made determines the color of the light, and the voltage required for forward biasing. LEDs have a very long life, because the light is electrical energy flowing through the diode, and NOT heat. An LED is not a load device and must have a resistor in series to limit the current of the circuit so the LED is not be damaged.

Photo Diode

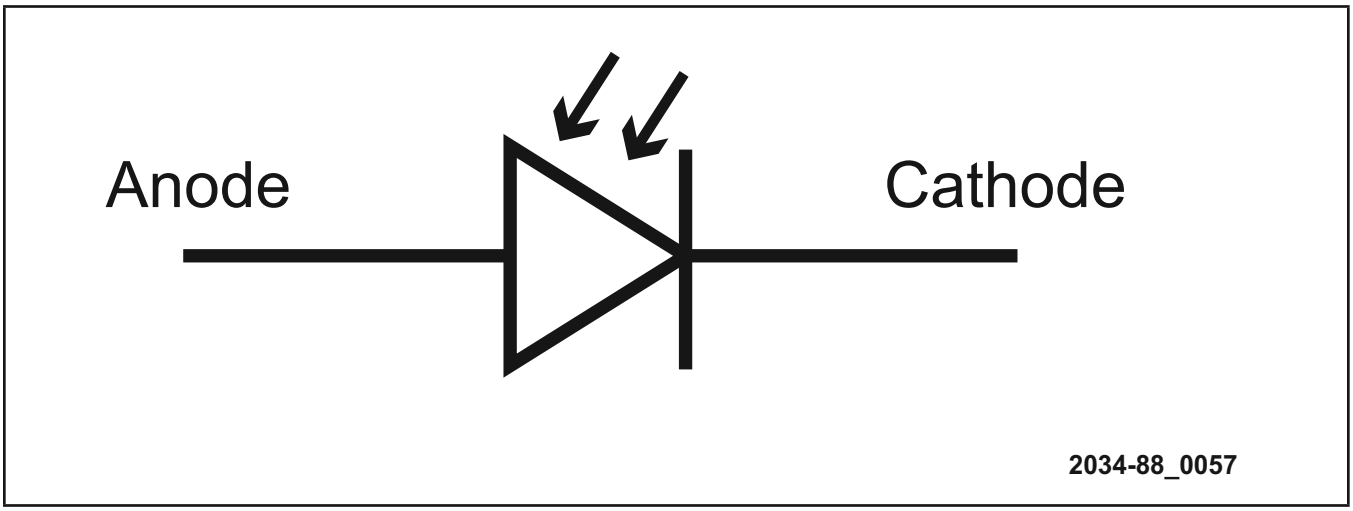

Figure 57 Photo Diode

A photo diode allows current to flow in one direction only, but current flow is reversed only when the photo diode is subjected to a specific amount of light.

CARCHIPCARE
https://carchipcare.com
+91 9269969060

Clamping Diodes

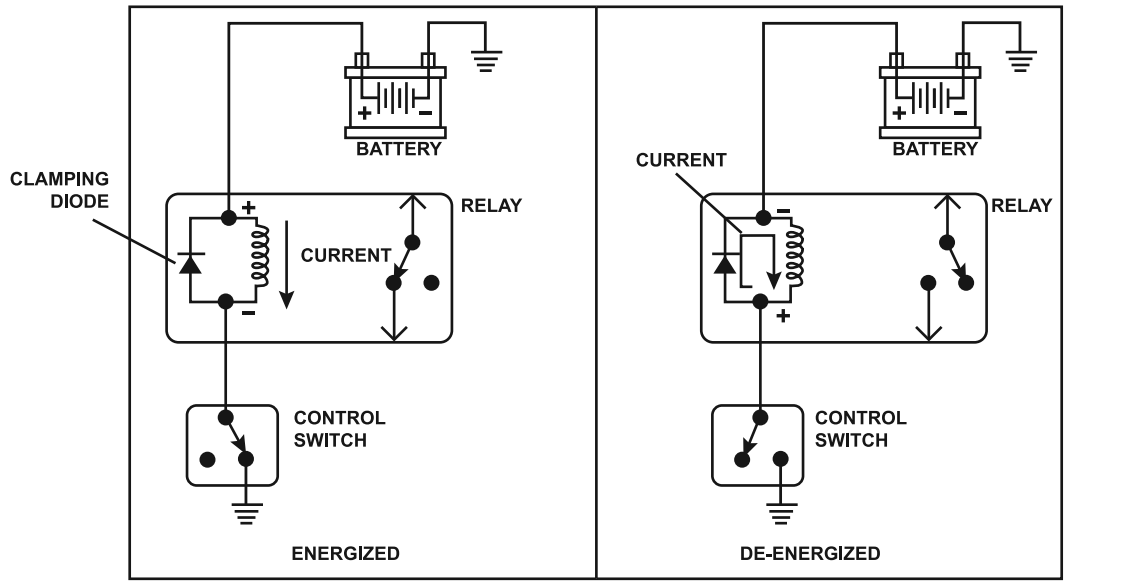

Figure 58 Clamping Diode Within Relays

Clamping diodes are used as a circuit protection device in circuits that use a coil, such as some relays, A/C compressor clutch coils, etc. When current is shut off to a coil and its magnetic field collapses, a voltage spike occurs. Because control modules are controlling most circuits, they require protection from these spikes.

Clamping diodes are placed in parallel across the coil, giving the high voltage an alternative path to flow instead of back to the control module. When a relay is reversed and utilizes a clamping diode, the clamping diode does not protect the circuit because it is reversed. This is why resistors are now used within the circuit to keep the current of the circuit low. The emitter is usually grounded.

Figure 59 Resistor Within a Relay

NOTE: Most modern today use a resistor in parallel to the coil, instead of a clamping diode.

CARCHIPCARE
https://carchipcare.com
+91 9269969060

TRANSISTORS

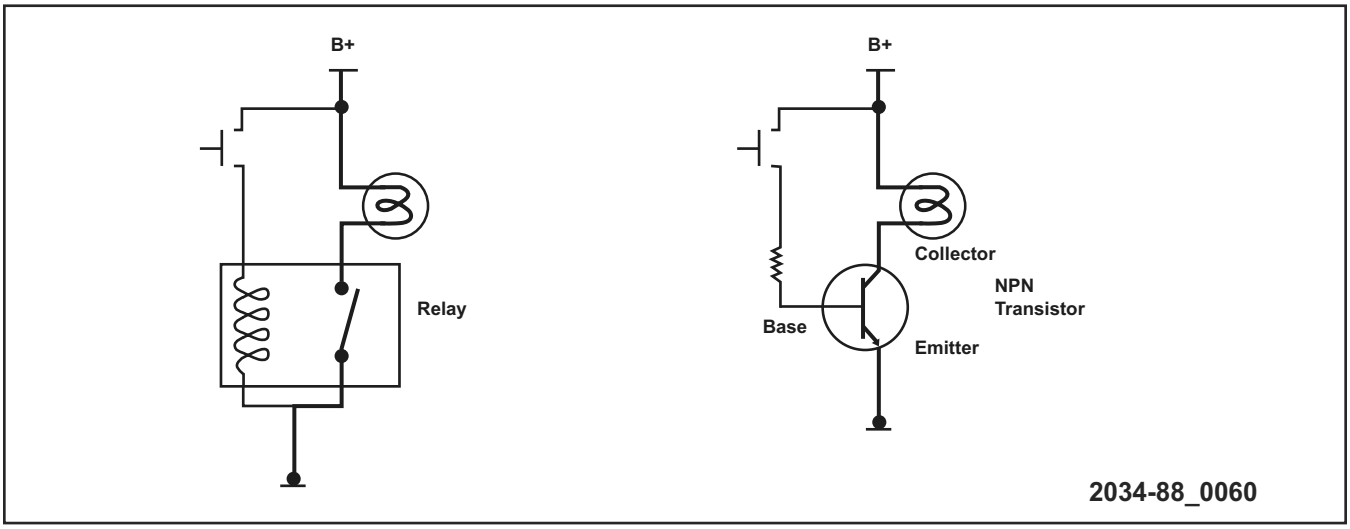

Figure 60 Similarity in Function Between a Relay and a Transistor

Transistors are very common solid-state semiconductor components used in controllers. Transistors are similar to electromechanical relays, in that they control a high-current circuit with a low-current command. Transistors have no moving parts and can switch current much faster than a relay. A current limiting resistor within the circuit keeps the current of the circuit low. The emitter is usually grounded.

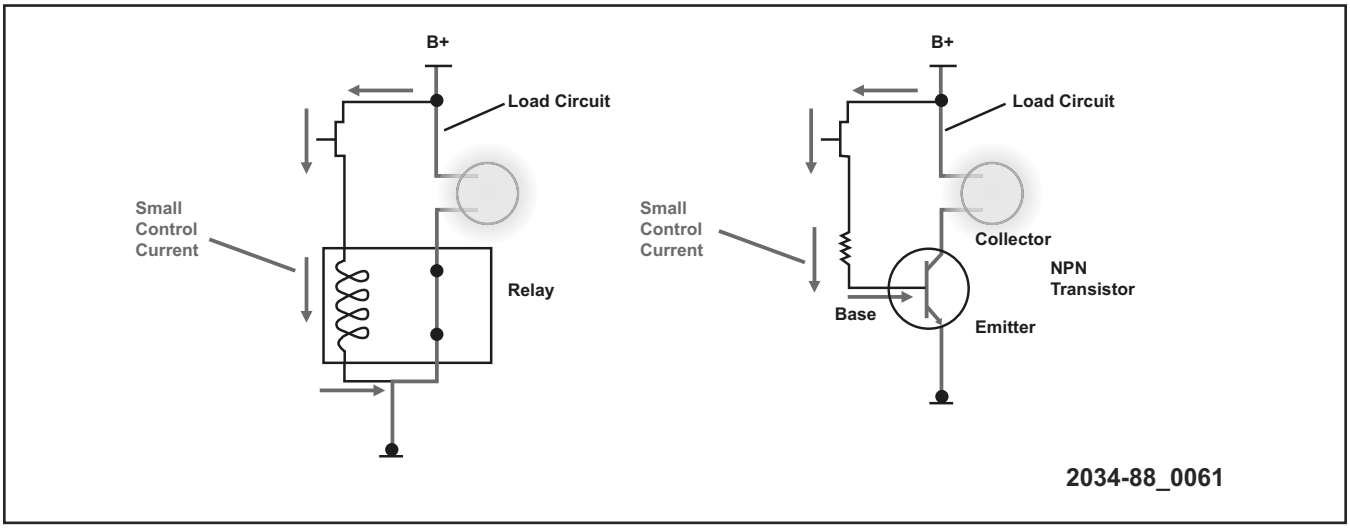

Figure 61 Relay On/Transistor On

Several types of transistors are used in automotive applications:

- Bipolar transistors
- Field effect transistors (FET)

There are two types of bipolar transistors:

- NPN
- PNP

CARCHIPCARE
https://carchipcare.com
+91 9269969060

NPN and PNP Transistors

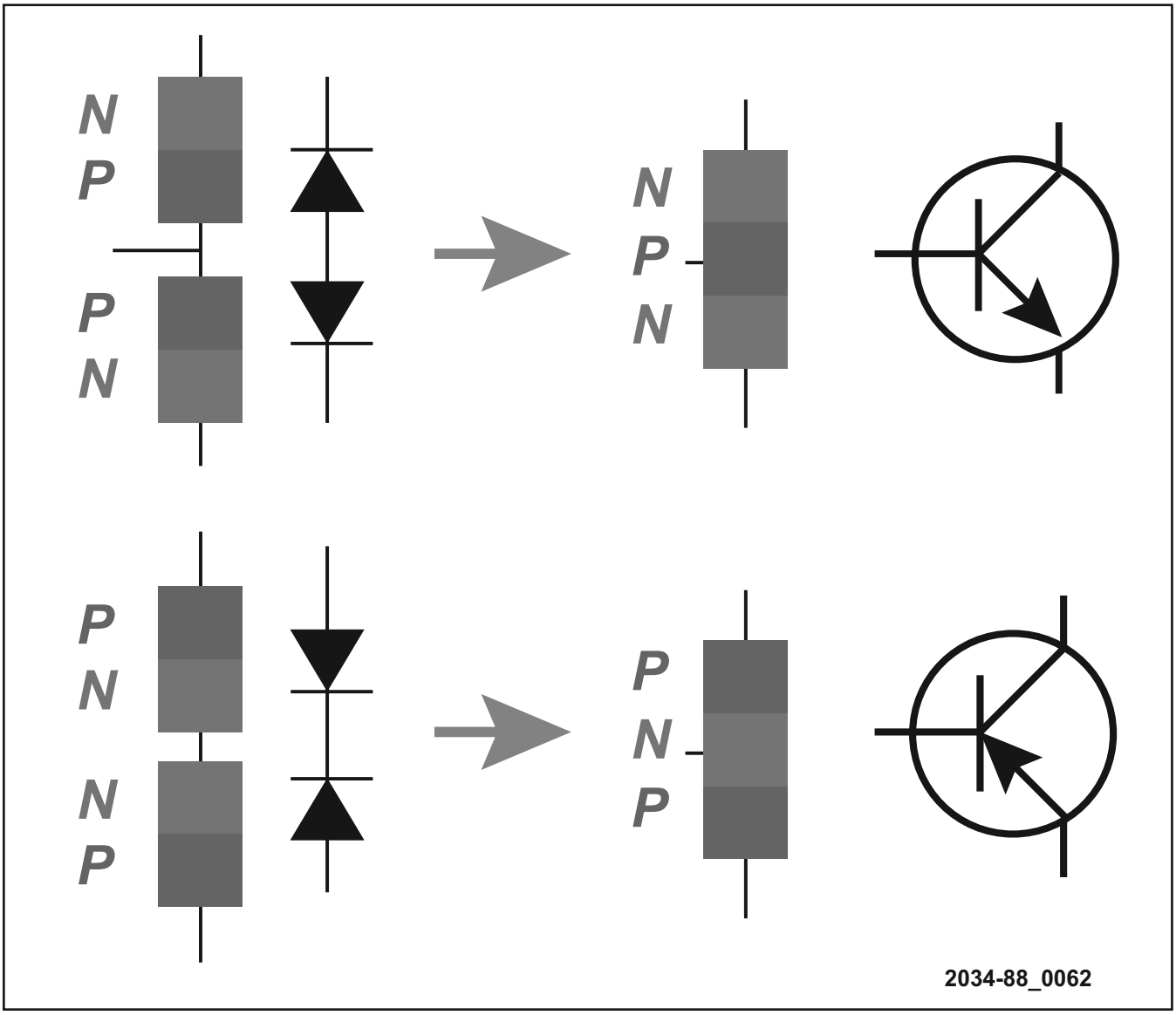

Figure 62 NPN Transistors (LSD) and PNP Transistors (HSD)

NPN transistors are also called low-side drivers and are used for ground-side switching. PNP transistors, are also called high-side drivers and are used for power-side switching. Some HSDs can also be referred to as “Smart” drivers.

Smart drivers have diagnostic capabilities that monitor current flow, temperature, and the state (high or low) of a circuit. Self-diagnostic circuits monitor parameters to determine whether the circuit is performing as expected.

CARCHIPCARE
https://carchipcare.com
+91 9269969060

Bipolar Transistor

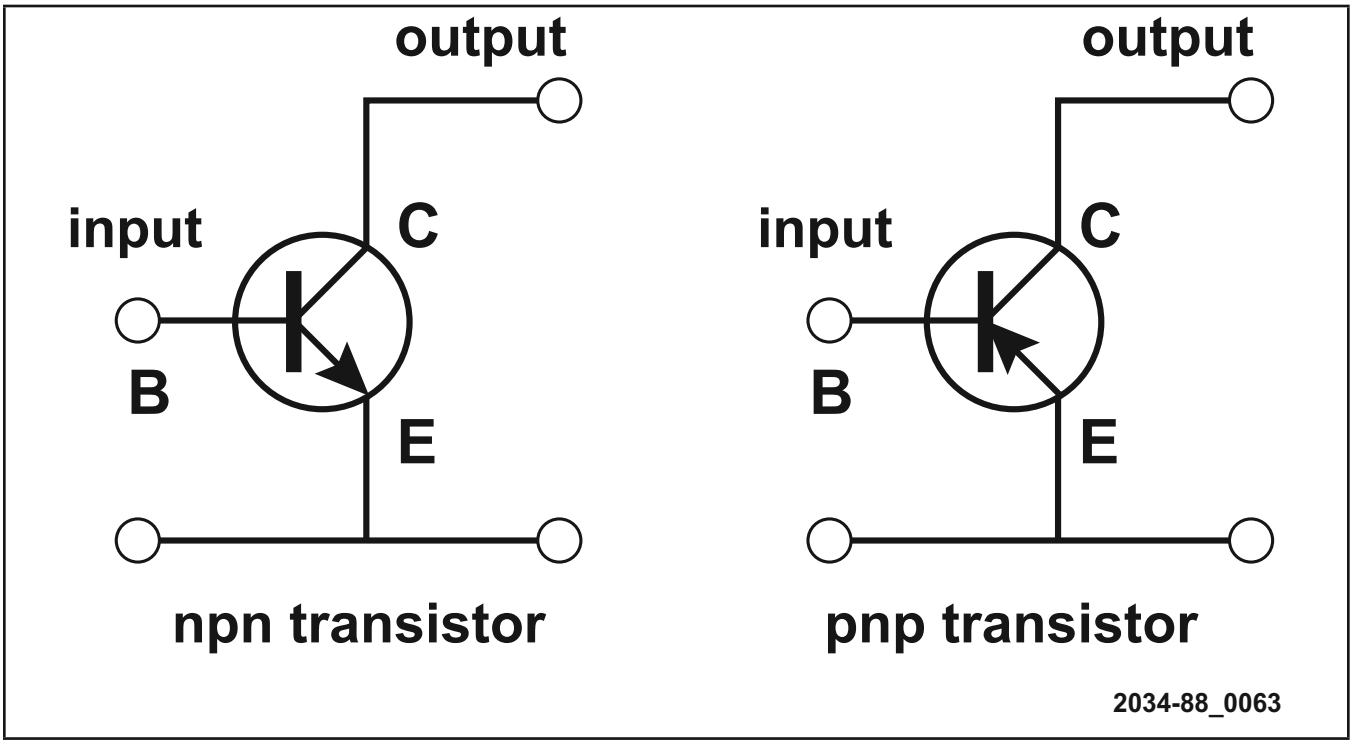

Figure 63 Bipolar Transistor

Bipolar transistors have three main elements: base, collector, and emitter. The base/emitter is the control circuit and the collector/emitter is the load circuit.

When current flows through the base/emitter circuit, the collector/emitter circuit conducts with low resistance. This is similar to a relay, where a low control current through the relay coil (base/emitter) can turn on a high current through the load contacts (collector/emitter).

CARCHIPCARE
https://carchipcare.com
+91 9269969060

CAPACITORS

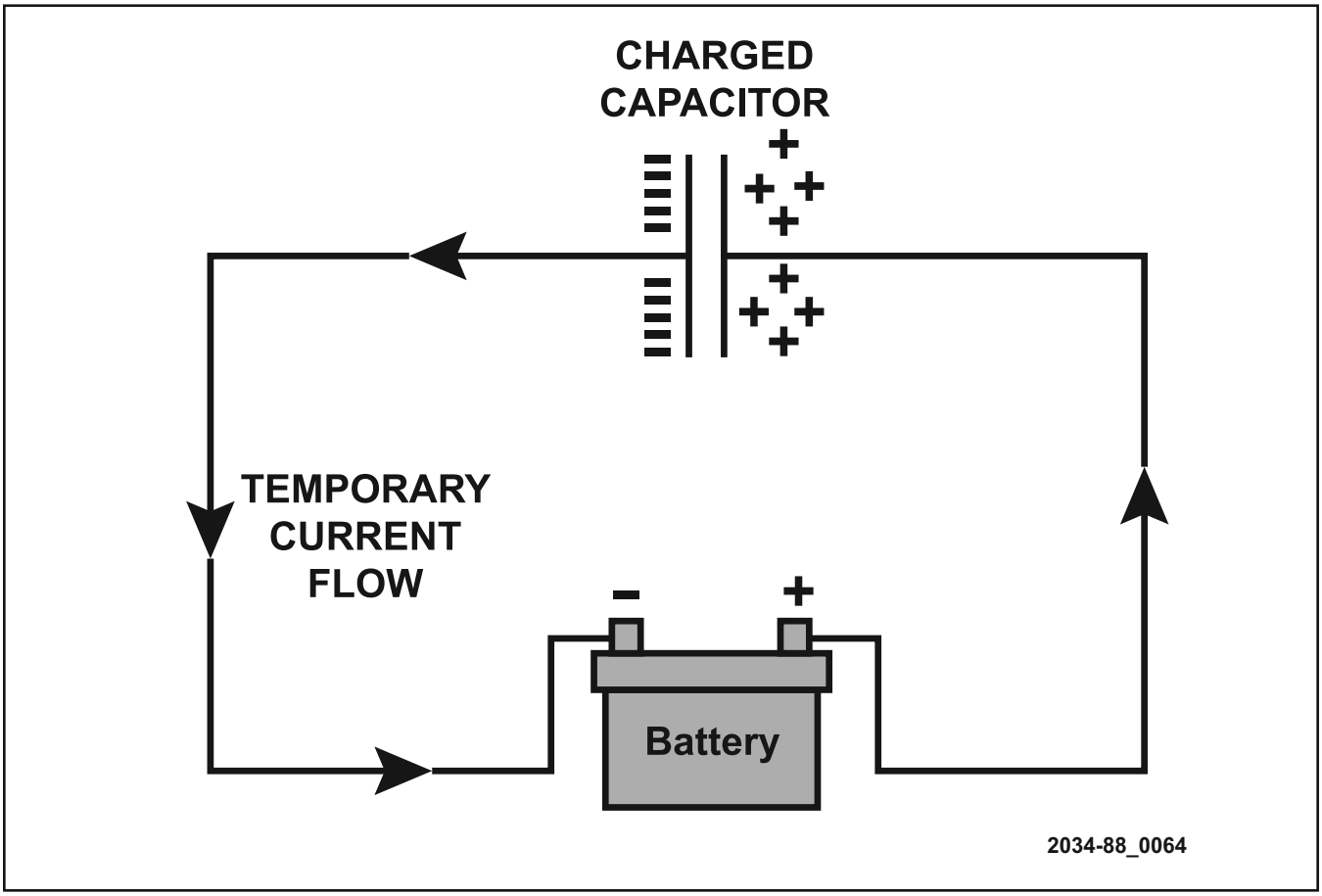

Figure 64 Capacitor

A capacitor is a device that can store an electric charge. Capacitors can be used for circuit surge protection, noise suppression, and as a temporary voltage supply for air bag deployment when power has been lost to the airbag module.

Capacitors are constructed of two metal plates separated by an insulator. Applying a voltage to a capacitor charges the plates, one plate positively and one plate negatively. When the voltage is removed, the capacitor plates remain charged. The capacitance, or storage capacity of the condenser is measured in farads. Another name for a capacitor is a condenser.

CARCHIPCARE
https://carchipcare.com
+91 9269969060

OUTPUT (LOAD) DEVICES

Load devices perform work in a circuit. Loads convert electrical energy into another form of energy such as heat, sound, motion, or light. Loads are the intentional resistance within a circuit.

Load Devices Include:

- Lamps
- Motors
- Coils
- Solenoids
- Heating elements

Lamps

Head lamps/Park Lamps/Turn Signals

While some lighting systems utilize a relay for operation, most modern systems are controlled by HSDs located within a control module. When the driver actuates the head lamp switch, a MUX signal is sent to the control module Which sends the head lamp-on command over a data bus and activates the HSDs for the head lamps. The HSDs are pulse-width-modulated to regulate voltage to the head lamps. This can prevent over-voltage conditions and increases head lamp life. PWM is also used for other lighting applications.

Turn Signal Lamps

On some applications, the turn signal switch sends a MUX signal to a control module to activate the turn signals. The control module sends a bus message to the appropriate control module that activates a HSD to power the turn signal lamp circuits.

CARCHIPCARE
https://carchipcare.com
+91 9269969060

Exterior Lamps

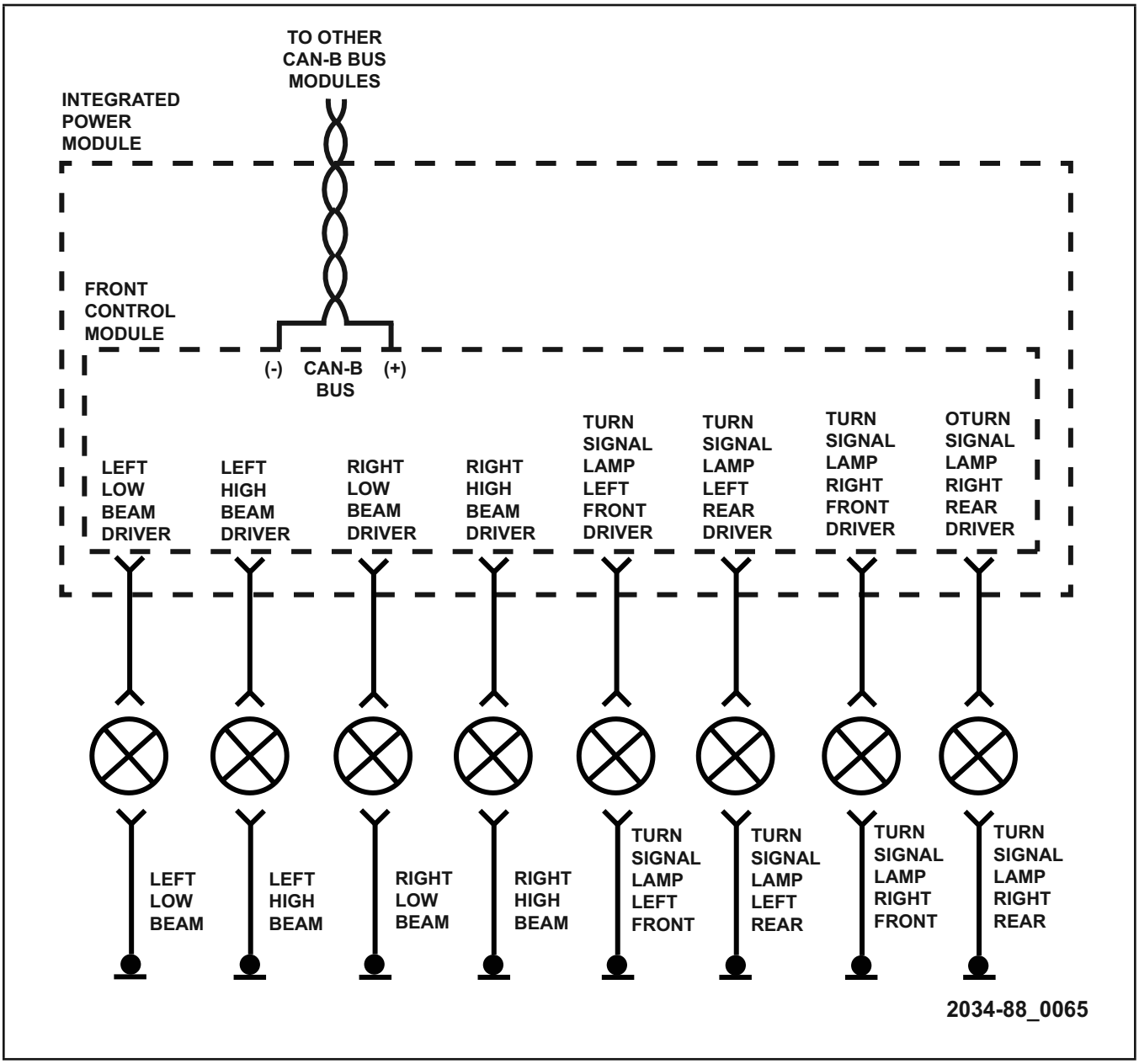

Figure 65 HSD-controlled Exterior Lamps

CARCHIPCARE
https://carchipcare.com
+91 9269969060

Park Lamps

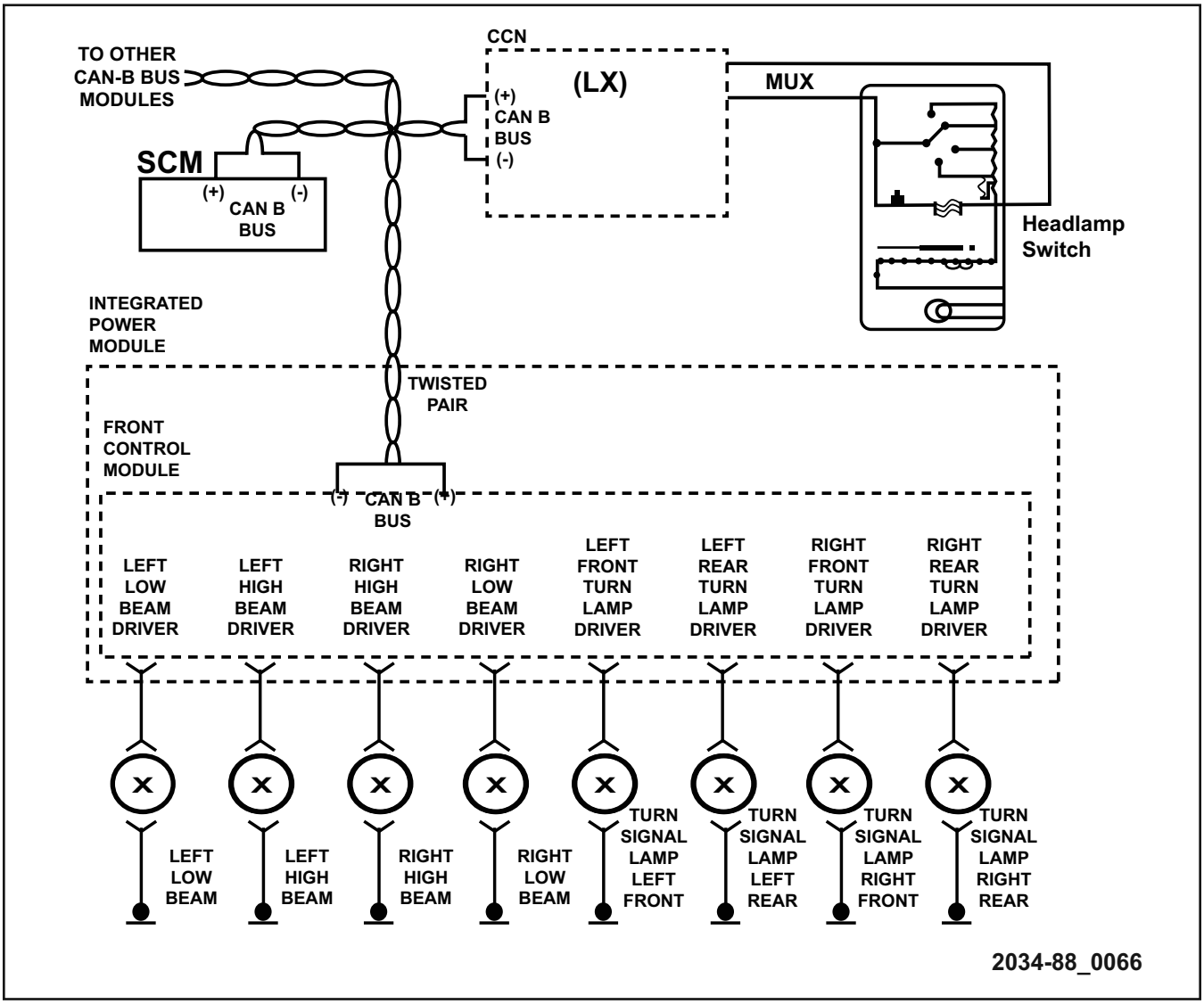

Figure 66 Relay Energized by an LSD

Park lamps are no longer hard-wired to a switch. Typically, the control module controls the operation of the park lamps. On some applications, a control module activates a relay with a low-side driver. The exterior lamp switch provides an input to a control module. This module sends a bus message to activate the park lamps. When the exterior lamp switch is turned to the on position, and conditions are met, the control module activates the control circuit of the park lamp relay. The relay applies power to the park lamps to turn the lamps on.

CARCHIPCARE
https://carchipcare.com
+91 9269969060

Motors

Permanent Magnet Motor

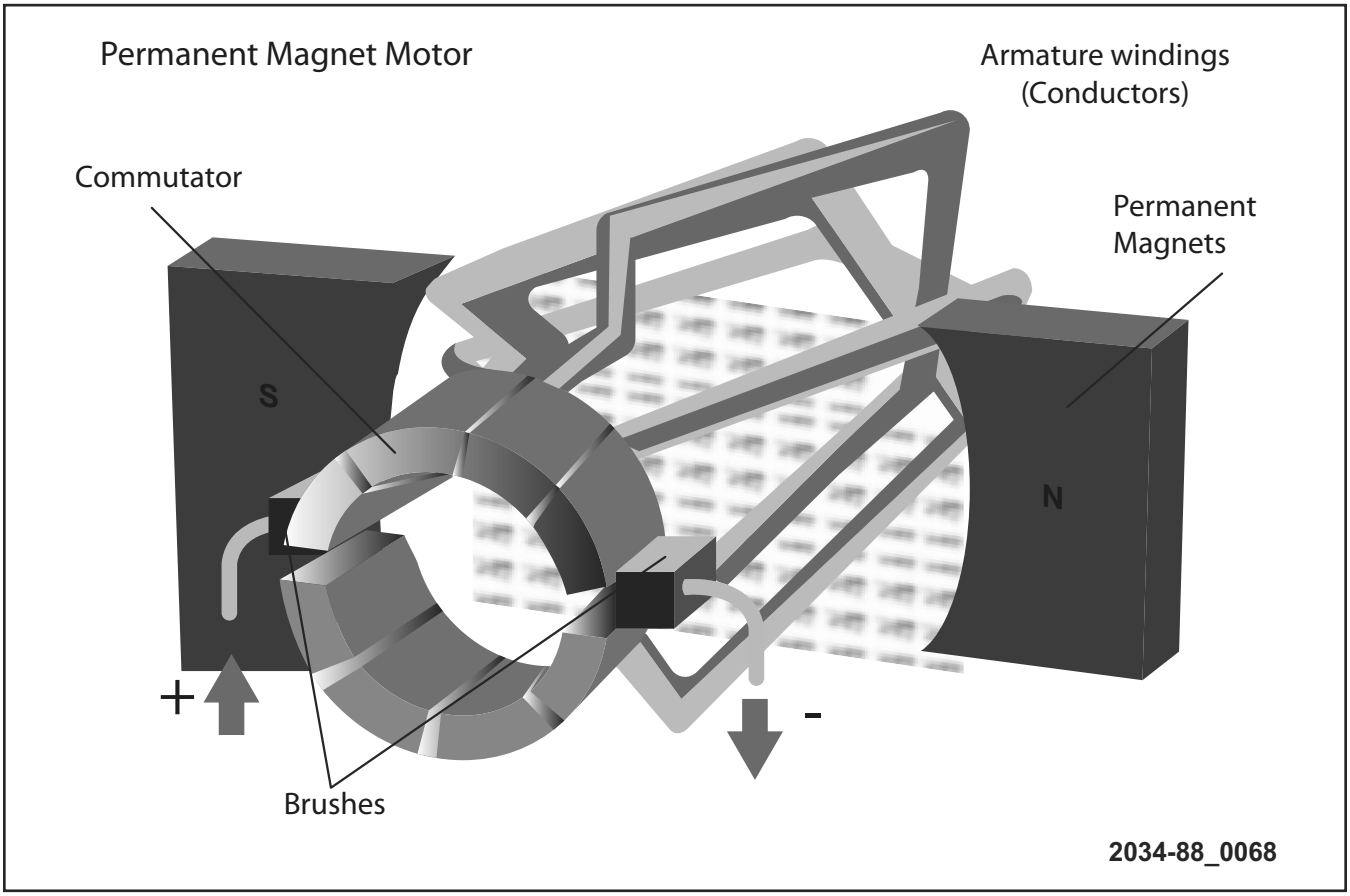

Figure 67 Permanent Magnet Motor

Direct current (DC) motors are one of the most common load devices on vehicles. Electric motors convert electrical energy to a mechanical motion.

When a current-carrying conductor is in a magnetic field, interacting forces try to push the conductor out of the magnetic field. If the conductor is looped and permitted to rotate, we have an electric motor.

The direction the conductor tries to move depends on the direction of current flow in the conductor and the direction of current flow of the magnetic field.

Current flows to the rotating conductors through stationary carbon brushes and rotating copper commutator segments.

The main parts of a motor:

- Magnetic field
- Rotating armature
- Brushes
- Commutator

CARCHIPCARE
https://carchipcare.com
+91 9269969060

Blower Motors

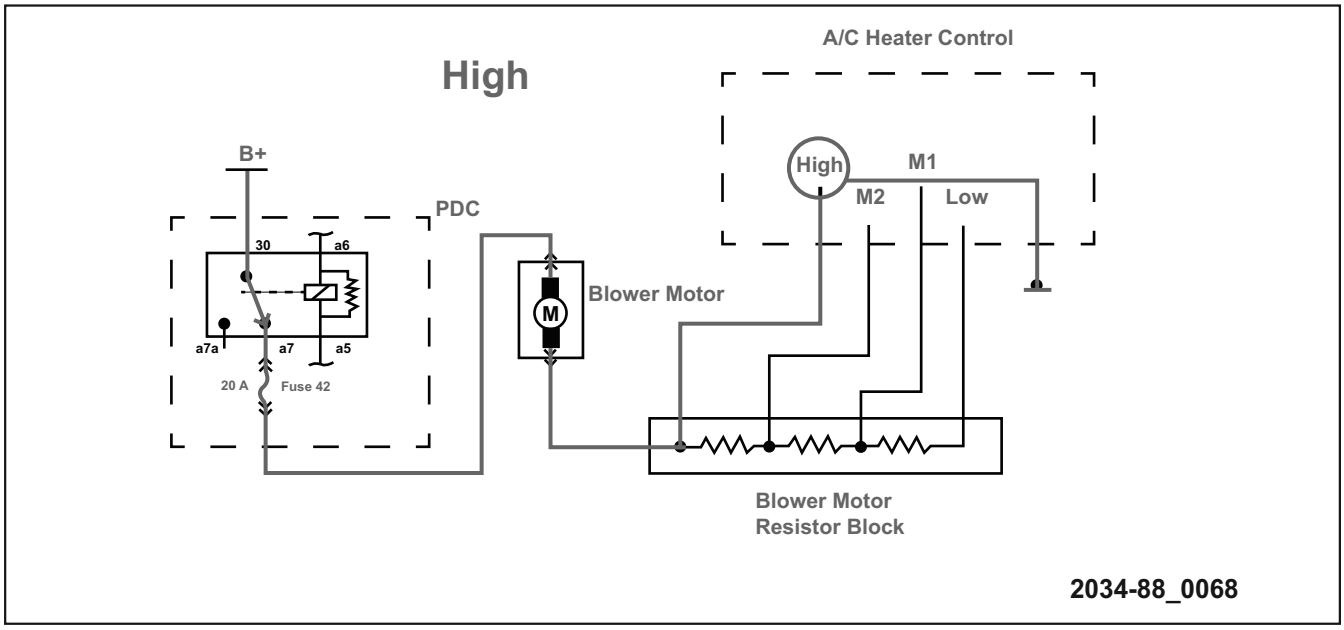

Figure 68 Manual Temperature Control

Blower motors typically are two-brush permanent magnet motors. Blower motor speed can be regulated in two different ways.

In manual climate control systems, blower motors have stepped resistors in series with the motor. Each blower speed switch position places a different combination of resistors in series with the motor. The voltage drop across the motor changes as different resistors are used to vary the motor speed. For high speed, all resistors are bypassed and the motor receives full battery voltage.

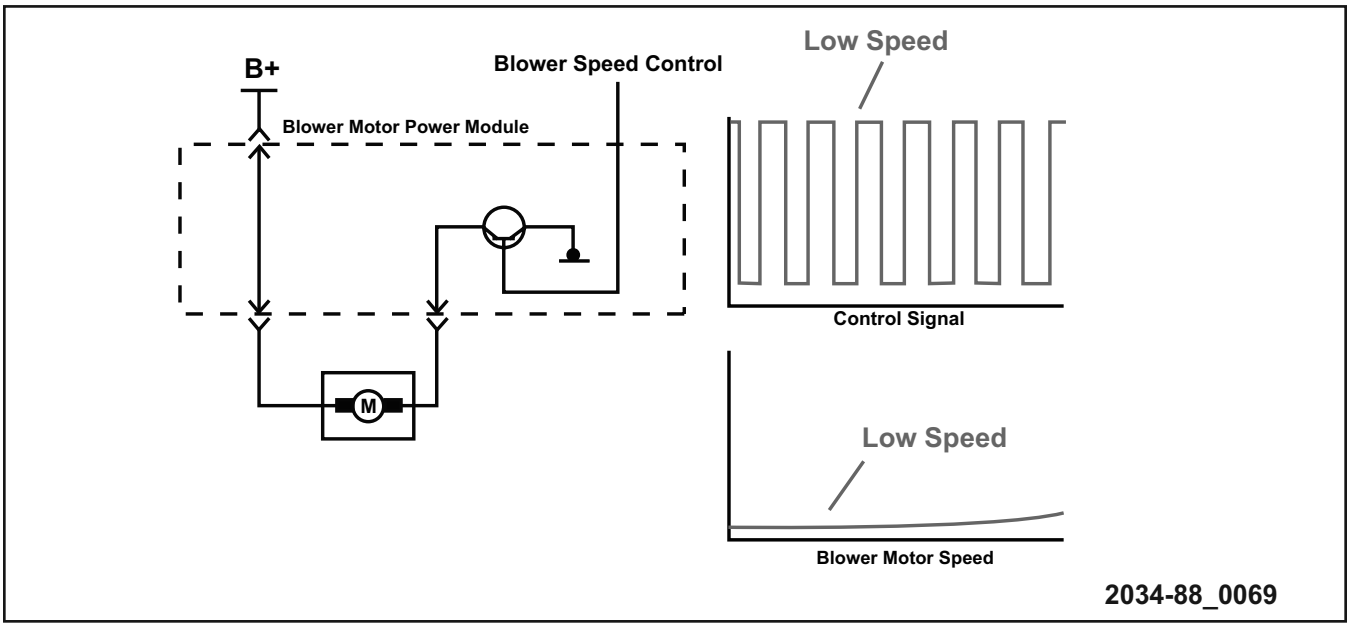

Figure 69 Automatic Temperature Control

In automatic climate control systems, the blower motor power module controls blower motor speed, by varying a pulse-width-modulated signal.

CARCHIPCARE
https://carchipcare.com
+91 9269969060

Relay Controlled Cooling Fan Motors

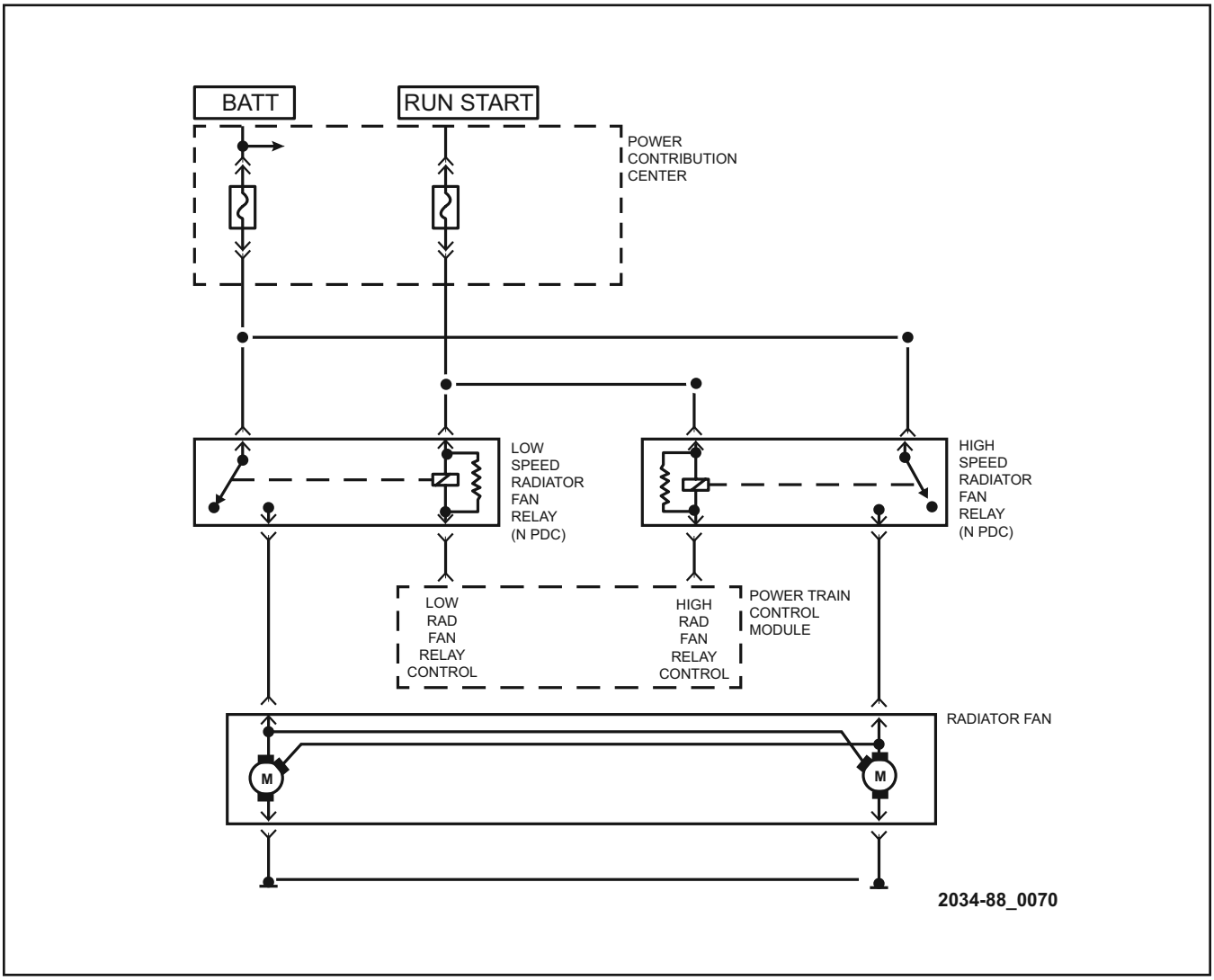

Figure 70 Cooling Fan Motors

Cooling fan motors are typically two-brush permanent magnet motors. Cooling fan motor speed depends on the vehicle application and a combination of temperature and vehicle speed inputs during normal operation. Vehicles can be equipped with single or dual fan relays to control fan speed and operation. The relays are ground-side controlled by the PCM.

On some models, the cooling fan module has dual, two-speed fan motor assemblies. On low speed, the motors are wired in series and receive current from the high/low cooling fan module relay.

In high-speed mode, the high/low relay remains energized, and the high-speed relay is also energized. Energizing the high speed relay changes the circuit so the fans are in parallel. This lowers circuit resistance, increases current flow and each fan receives full battery voltage. The fans run at high speed.

CARCHIPCARE
https://carchipcare.com
+91 9269969060

PWM HSD Controlled Cooling Fan Motors

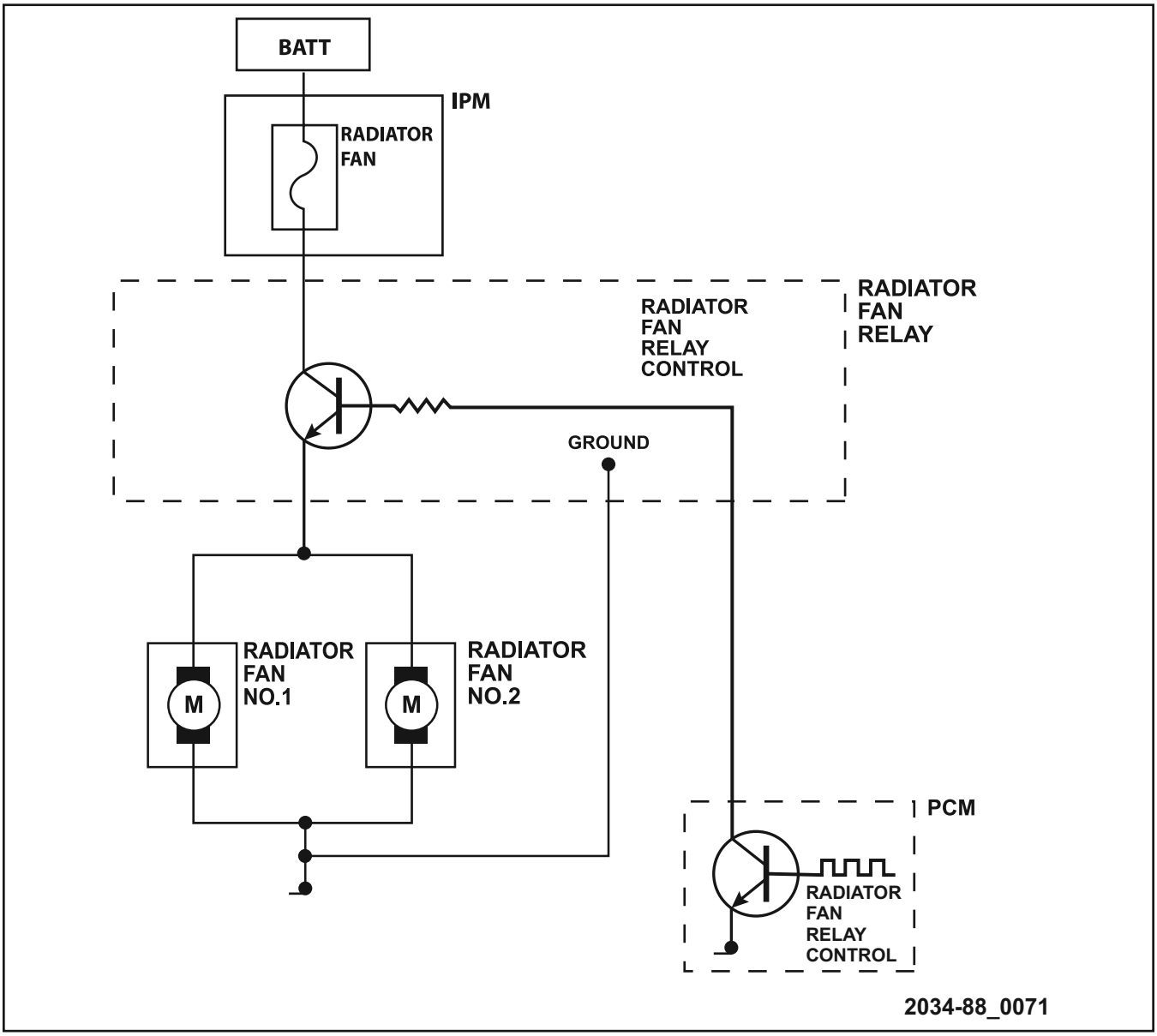

Figure 71 Cooling Fans Controlled by PWM HSD

Some vehicles are equipped with cooling fans operated by a PWM signal. On some applications, the PCM controls the cooling fan speed using a solid-state device. On applications using solid-state fan control, the PCM rapidly cycles a transistor on and off to regulate voltage and current to the fan motors. Because this device can generate a large amount of heat, it is usually mounted on the vehicle frame rail or bumper beam to dissipate heat.

On some vehicles, the cooling fans are directly wired to the nearest control module. The signal to operate the fans may be sent over a bus from one control module to another.

CARCHIPCARE
https://carchipcare.com
+91 9269969060

Reversible Motors

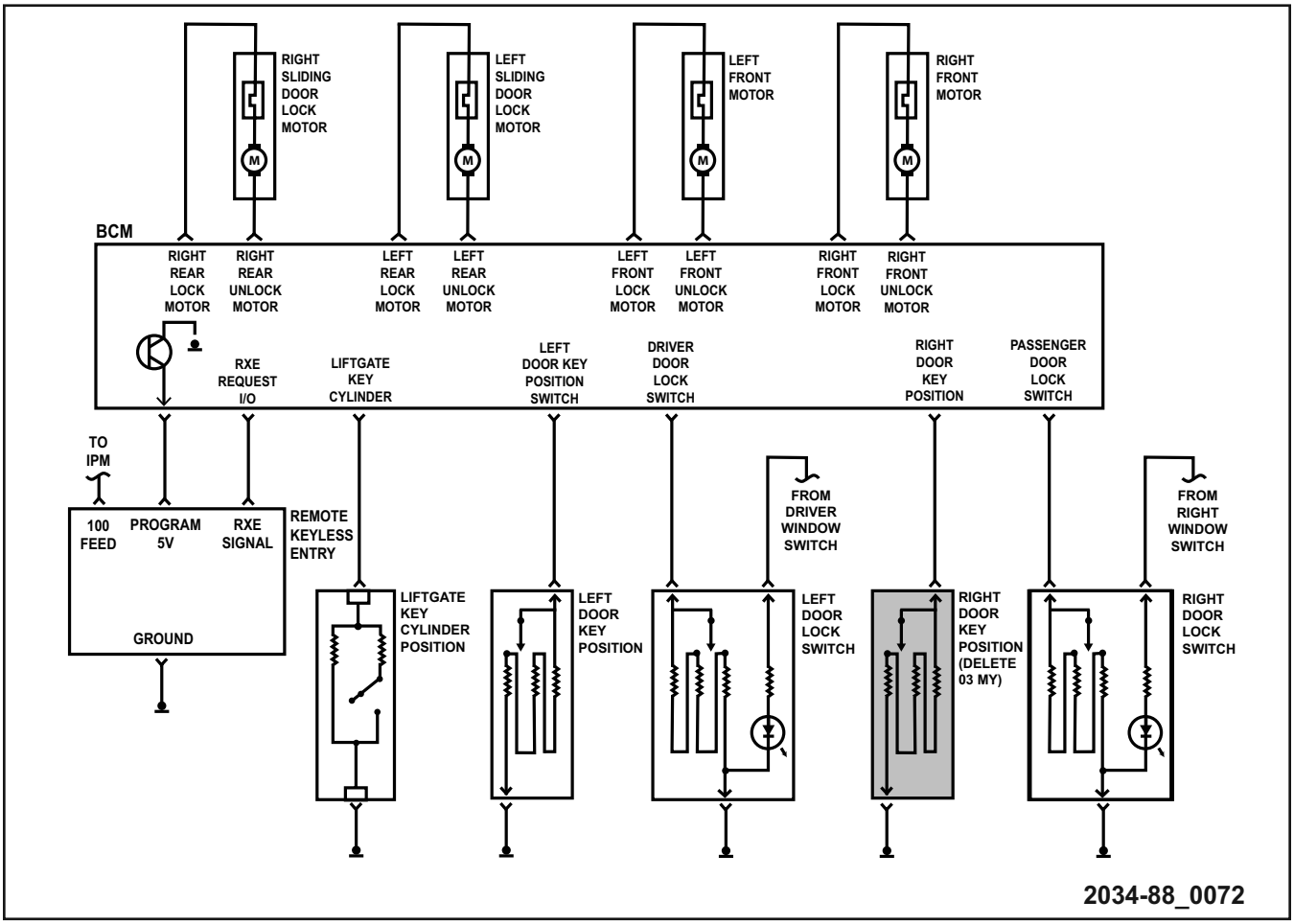

Figure 72 Lock/Unlock Motors

When the current to a permanent magnet DC motor is reversed, the motor armature rotates in the opposite direction.

Reversible motors include:

- Power windows
- Power mirrors
- Power seats
- Adjustable pedals
- Door locks
- Power sunroof
- Washer pumps

CARCHIPCARE
https://carchipcare.com
+91 9269969060

Stepper Motors

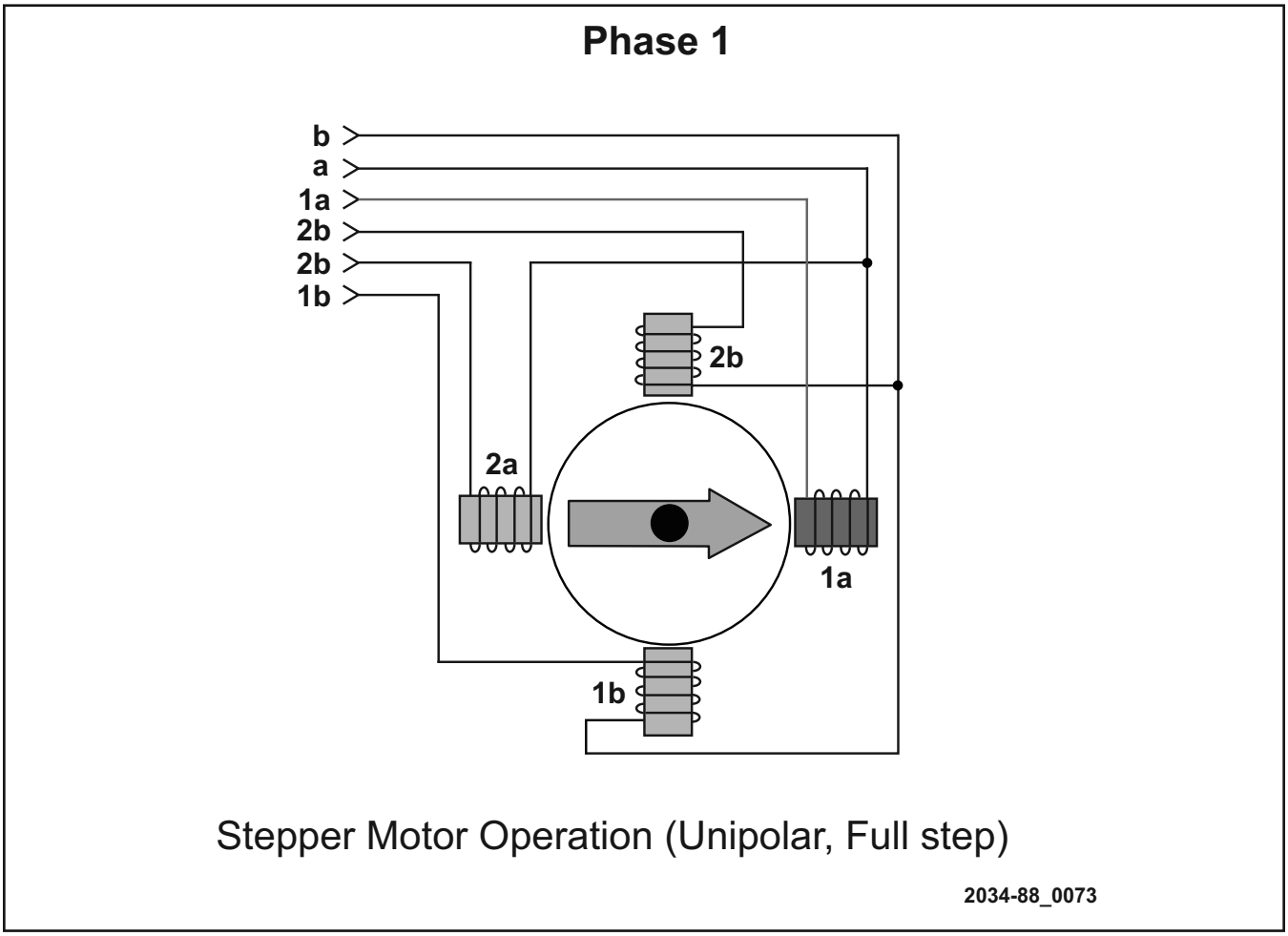

Figure 73 Stepper Motor

A stepper motor is an electric motor that moves in increments or steps, rather than turning smoothly like a conventional motor. Sets of stationary coils produce magnetic fields that interact with permanent magnets on the rotating armature. The coils are switched on and off in a specific sequence to cause the motor shaft to turn through the desired angle.

The motor can operate in either direction (clockwise or counterclockwise). When the coils of a stepper motor receive current, the rotor shaft turns to a certain position and then stays there until different coils are energized.

Unlike a conventional motor, the stepper motor resists external torque applied to the shaft after the shaft has come to rest with current applied. This resistance is called holding torque.

An example of a stepper motor application is the idle air control (IAC) valve. The IAC motor is mounted on the throttle body, and is used by the PCM to adjust engine idle speed based on engine load, coolant temperature, or barometric pressure changes.

CARCHIPCARE
https://carchipcare.com
+91 9269969060

Servo Motors

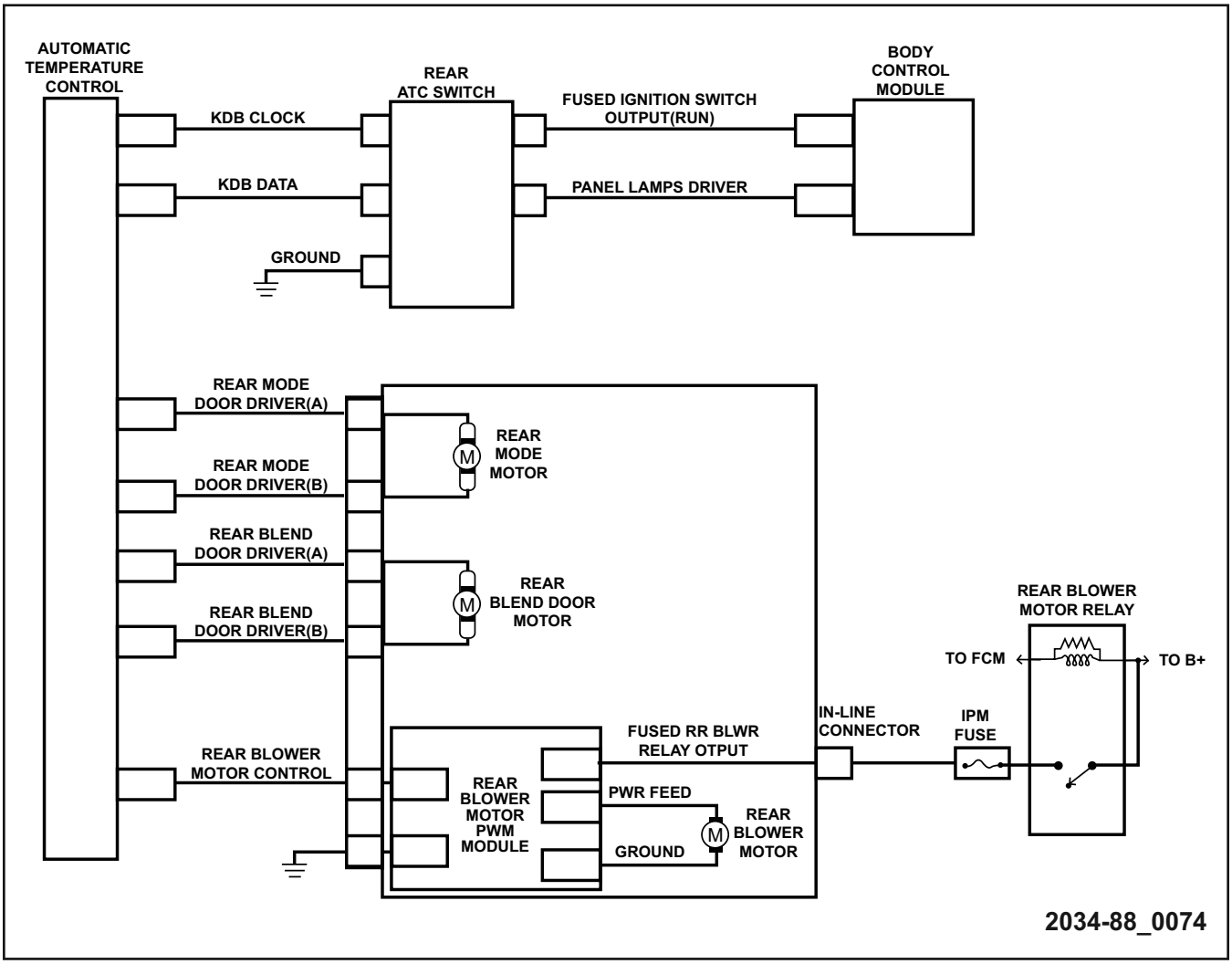

Figure 74 Servo Motors

A servo motor is an electric motor that is typically used to control the movement or positioning of a component. The motor may have a gear train to reduce speed and multiply torque. In the HVAC system, servo motors open and close air control doors to change the direction of air flow in the vehicle. They may be used with a position sensor to identify the position of the component.

CARCHIPCARE
https://carchipcare.com
+91 9269969060

COILS

A/C Compressor Clutch Coil

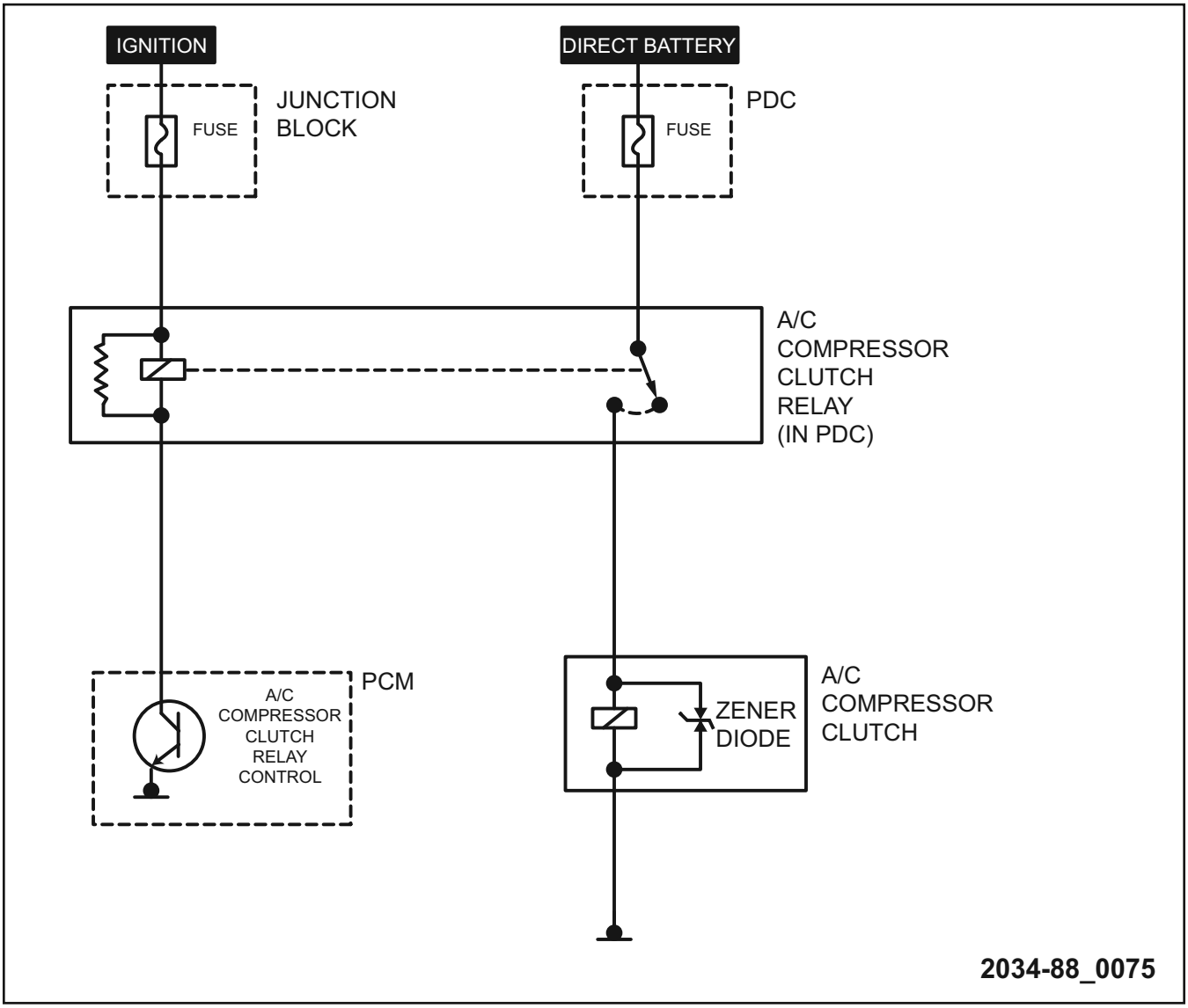

Figure 75 A/C Compressor Clutch Coil with Zener Diode

A coil is used at the A/C compressor clutch to engage and disengage the A/C compressor from the engine accessory drive belt. When the electromagnetic A/C clutch coil is energized, it creates a strong magnet that draws the clutch plate into contact with the clutch pulley to drive the compressor shaft. When the coil is not energized, the pulley freewheels on the clutch hub bearing.

The PCM controls A/C compressor clutch engagement. Vehicles that use an electromagnetic clutch typically have a Zener diode wired in parallel to the clutch coil to prevent spikes during the collapse of the magnetic field.

CARCHIPCARE
https://carchipcare.com
+91 9269969060

Ignition Coils

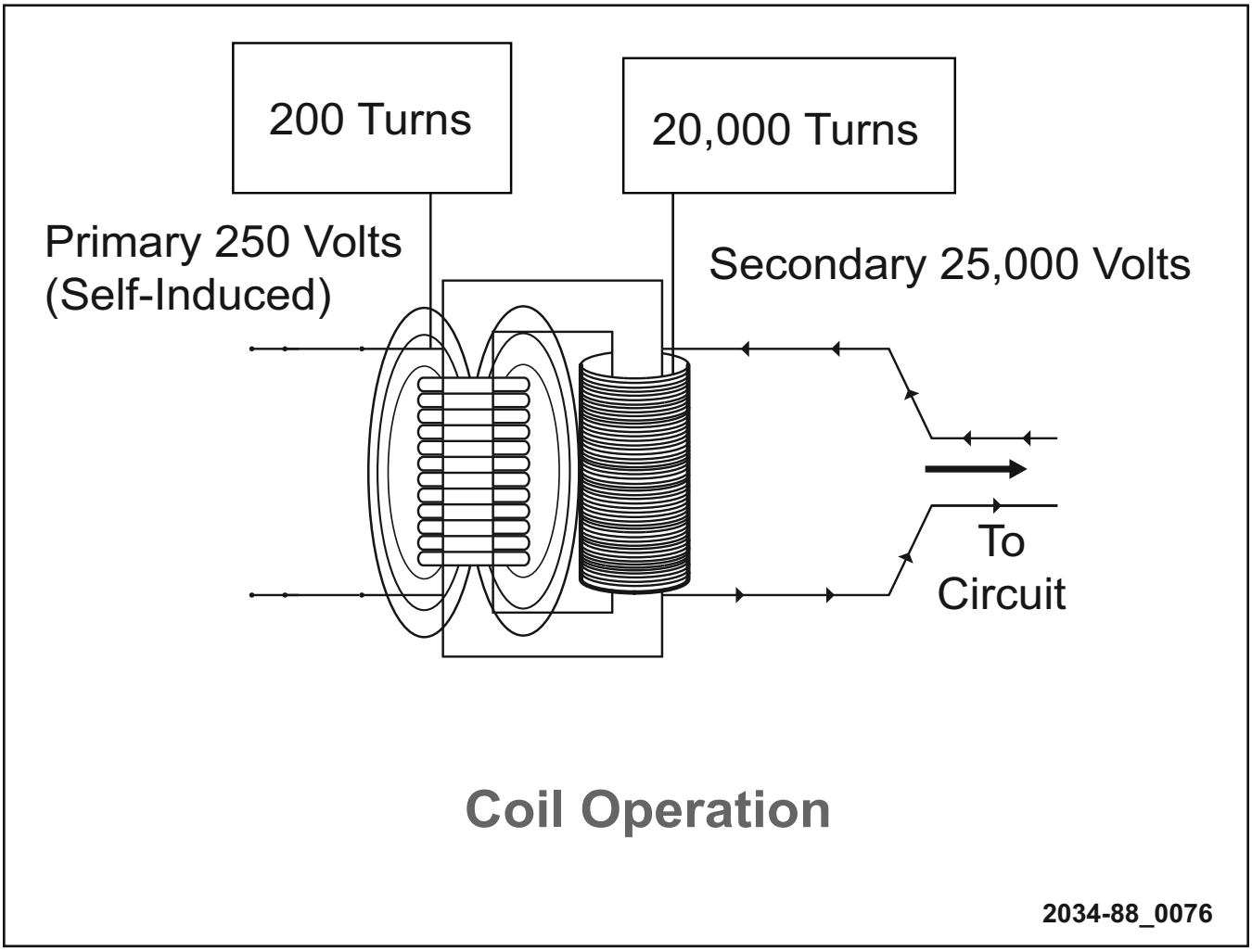

Figure 76 Coil Operation

The ignition coil is a step-up, pulsed transformer that increases low system voltage (12-14 volts) to high ignition secondary voltage (10-45,000 volts). On engines with coil-on-plug ignition, a coil is located above each spark plug.

Another type of ignition system uses one coil for pairs of spark plugs. On these engines, the coils may be located above the spark plugs, or mounted elsewhere on the engine and connected to the plugs with secondary ignition cables.

The ignition coil primary winding has a few hundred turns of wire, and the secondary winding has many thousands of turns. The turn ratio is typically between 100:1 and 200:1, so the induced secondary voltage is 100 to 200 times the primary voltage.

CARCHIPCARE
https://carchipcare.com
+91 9269969060

Solenoids

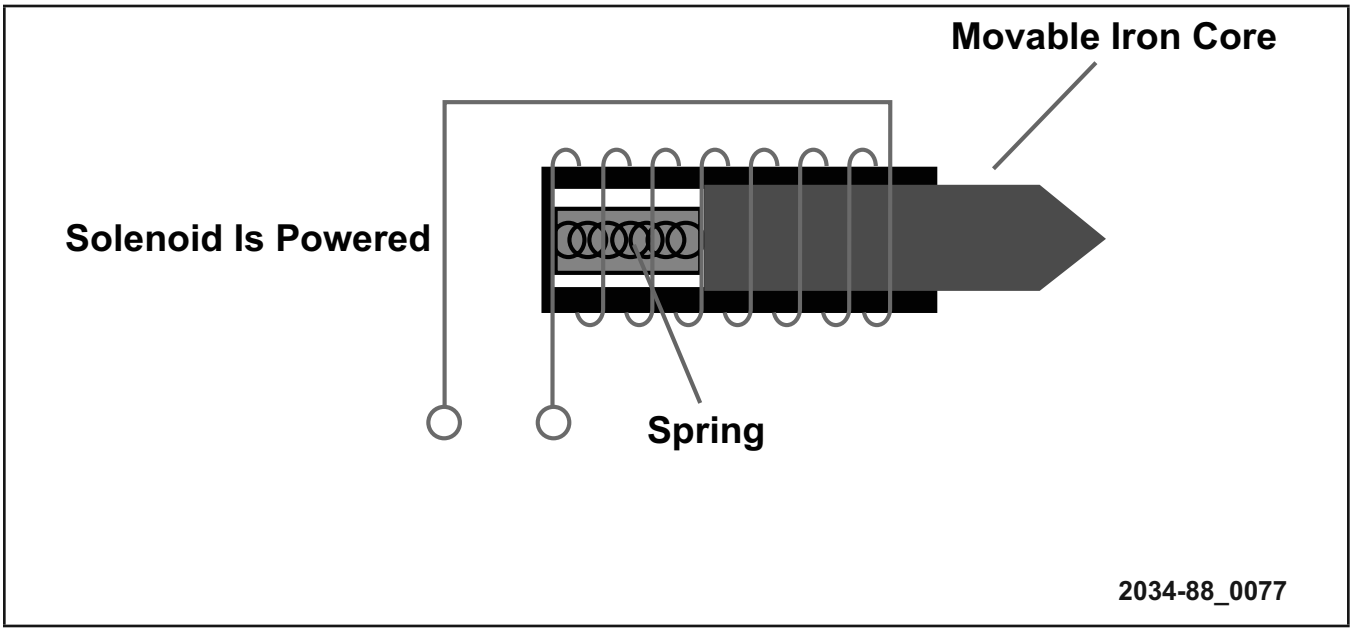

Figure 77 Solenoid

A solenoid is an electromechanical device that converts electrical energy into motion. A typical solenoid consists of a movable iron core or plunger, pull-in winding, and return spring. When the coil circuit is energized, the magnetic field created in the coil winding pulls the iron core against spring tension. When the coil circuit is de-energized, the return spring pushes the iron core outward to the rest position.

Typical solenoid applications include:

- Door locks
- Fuel injectors
- Starter solenoids
- Trunk release solenoid
- EVAP purge solenoid
- EGR solenoid
- Oil control solenoids for the multiple displacement system (MDS)

Solenoids that are directly controlled by a module typically use a circuit protection device to protect the module from spikes during the collapse of the magnetic field. However fuel injector circuits are set up a little differently. They are allowed to spike to about 70 volts as a diagnostic strategy before the voltage is clamped. If the windings in an injector are in good condition, they should easily be able to generate 70 volts during the collapse of the magnetic field. If not, a DTC is be set.

CARCHIPCARE
https://carchipcare.com
+91 9269969060

HEATING ELEMENTS

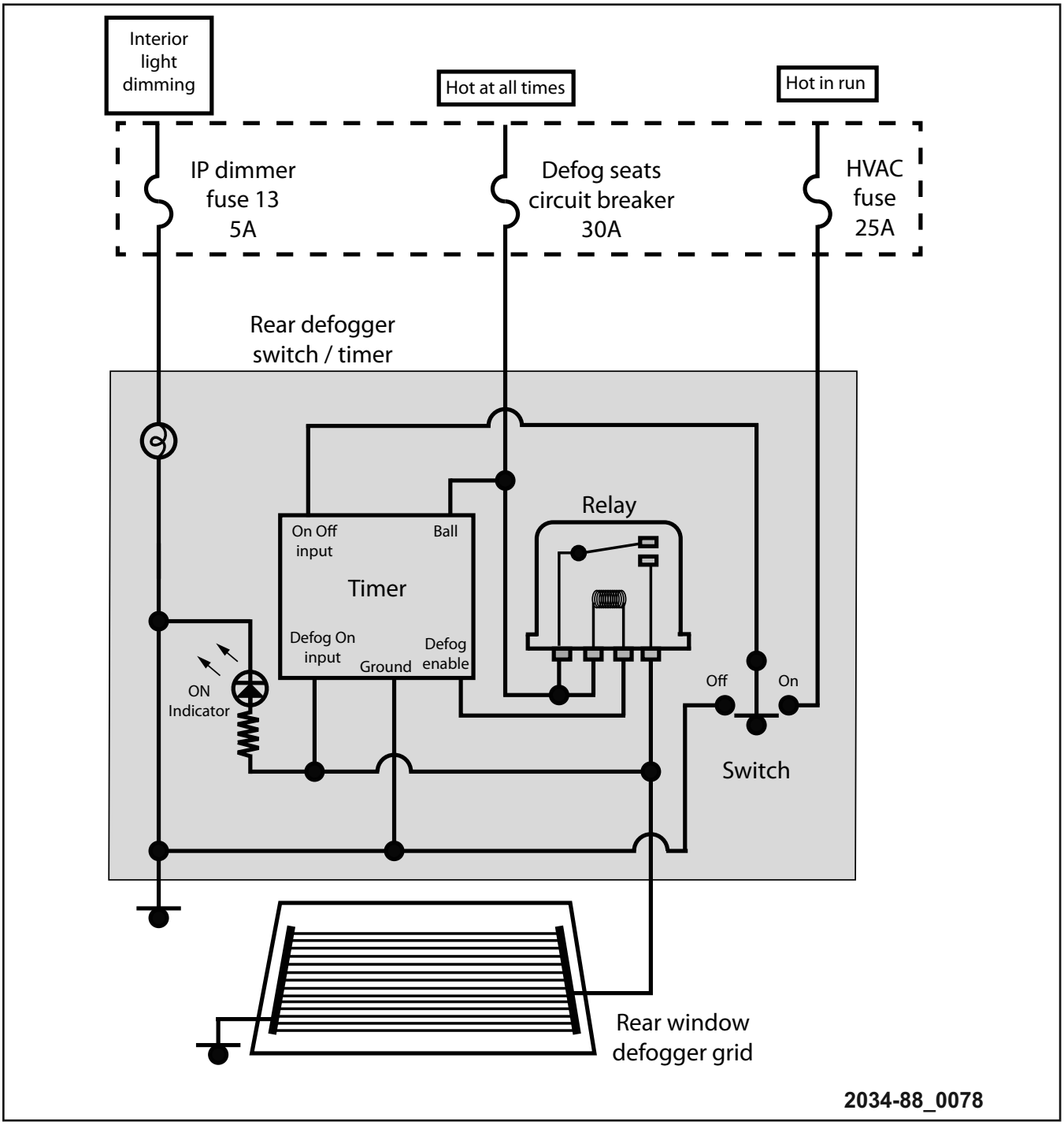

Figure 78 Timer Controlled Relay/Heating Element

Heating elements are used in oxygen sensors, heated seats, heated mirrors, and heated backlights. They are also used in some diesel and hybrid electric vehicles (HEV) to supplement the HVAC heater.

Some heaters use a relay to control power to the heating element. These systems typically use an internal timer circuit in the module to turn off the heater after a predetermined time interval.

CARCHIPCARE
https://carchipcare.com
+91 9269969060

Heated Seats

Temperature Sensing Heated Seats

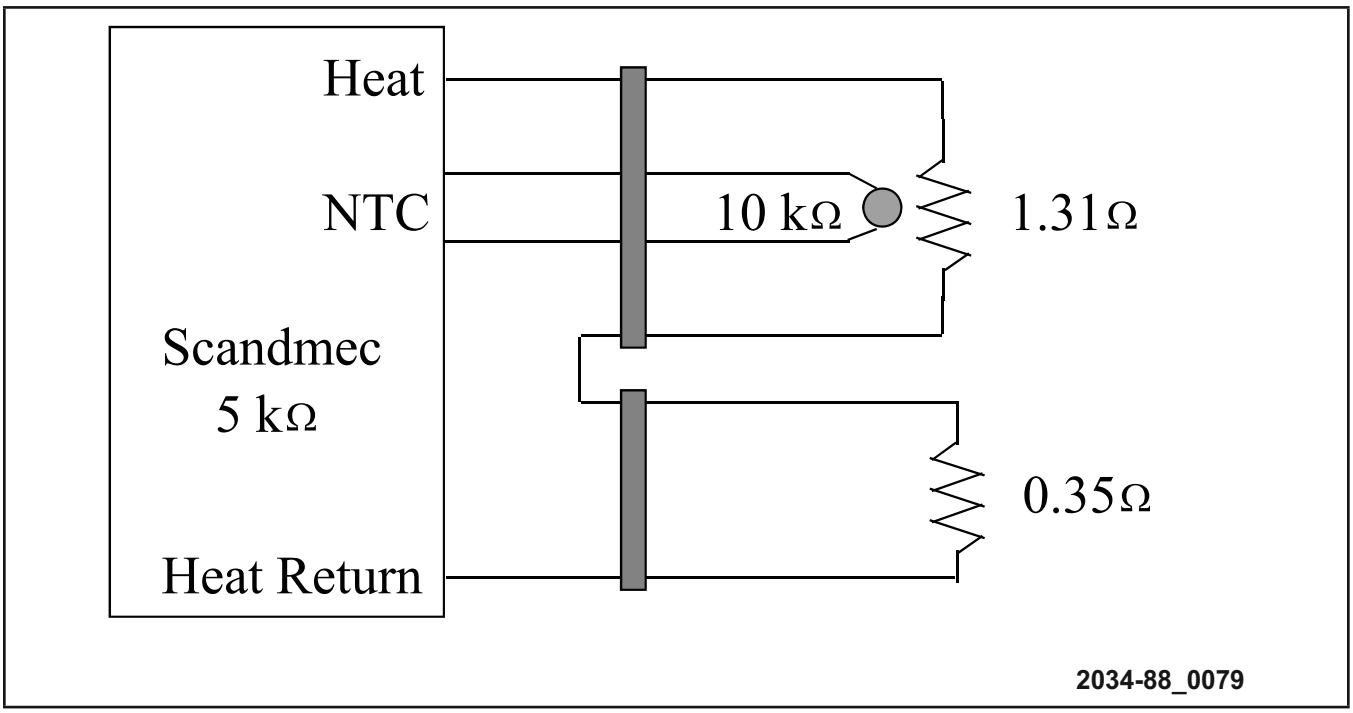

Figure 79 Temperature Sensor Controlled

Other heating elements use a temperature-sensing device, like an NTC thermistor, to determine temperature and regulate current accordingly.

CARCHIPCARE
https://carchipcare.com
+91 9269969060

PWM Heated Seats

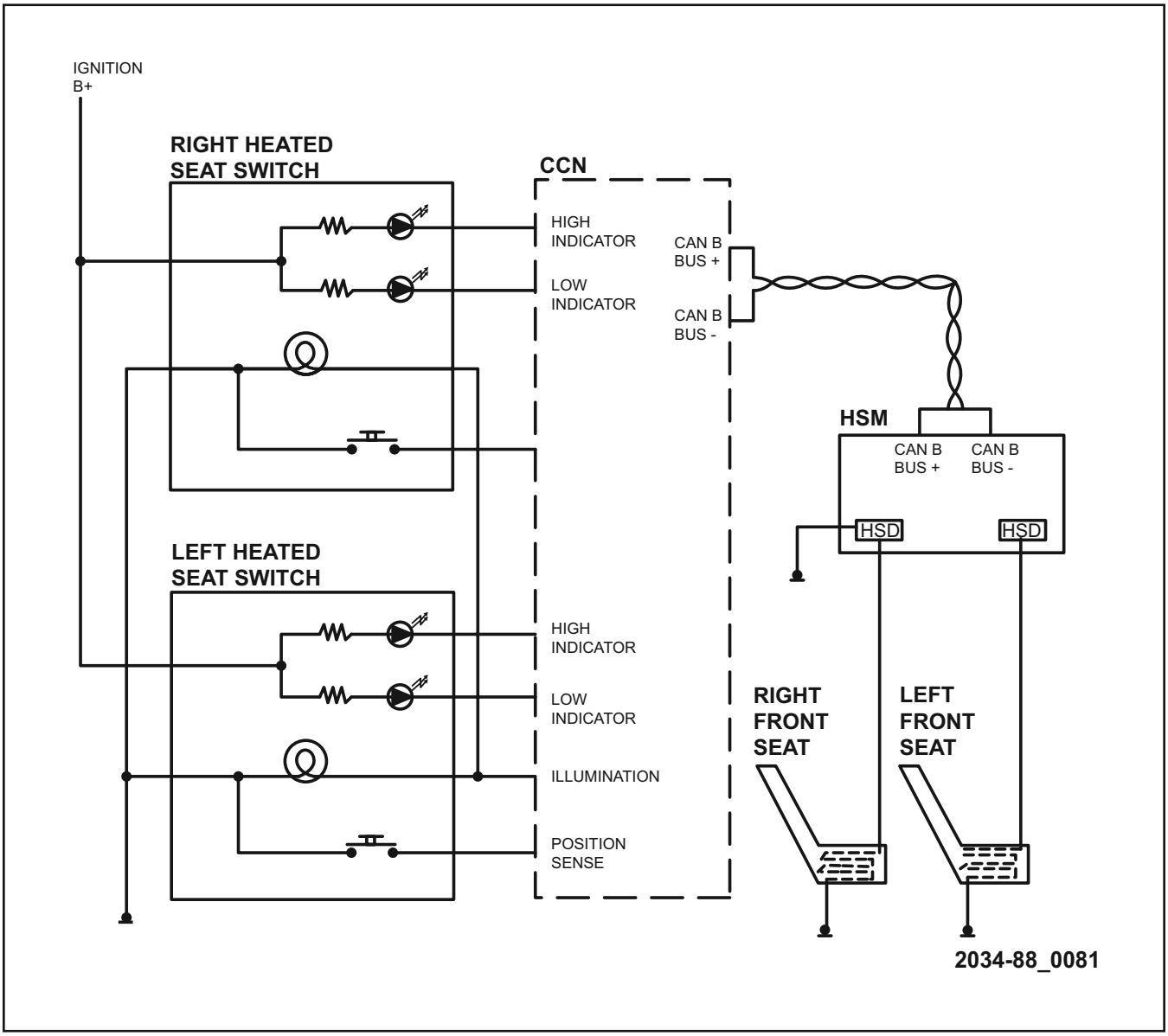

Figure 80 PWM Heated Seats

The most common method used today in controlling heating elements is by a PWM power supply provided by a control module. When the driver selects a specific temperature, the module adjusts the PWM signal to maintain that temperature.

CARCHIPCARE
https://carchipcare.com
+91 9269969060

Auxiliary Cabin Heater

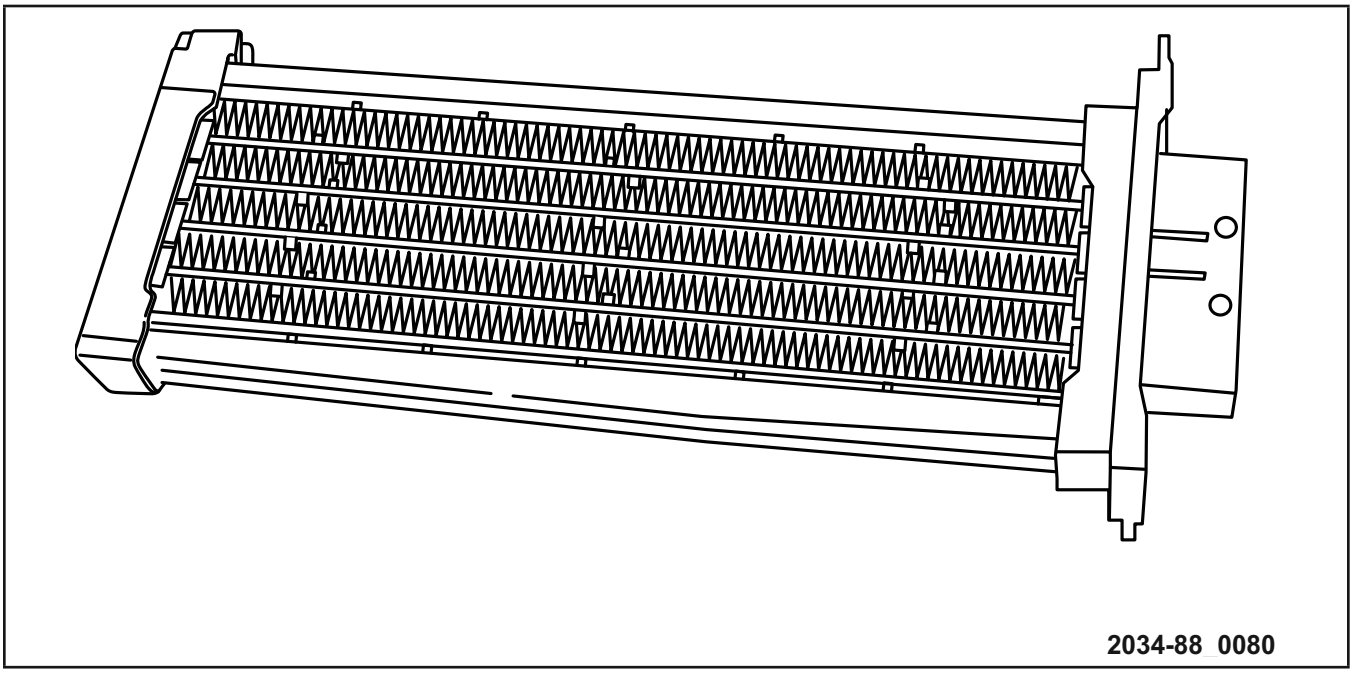

Figure 81 Supplemental Cabin Heater

Another method uses is a PTC resistive element that regulates current flow based on temperature. An example of this technology is the supplemental cabin heater used in some diesel vehicles.

CARCHIPCARE
https://carchipcare.com
+91 9269969060

Oxygen Sensor Heater Circuit

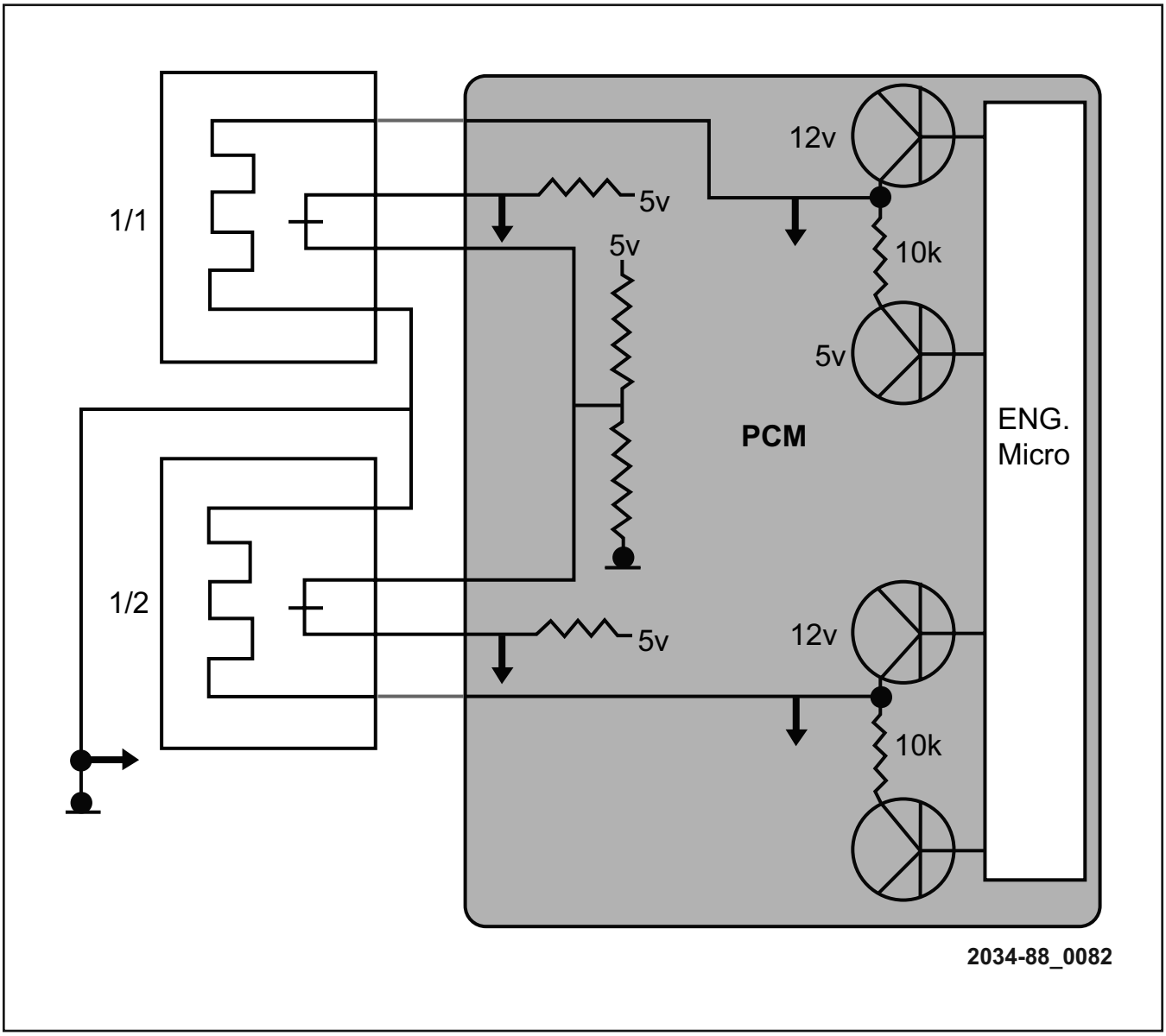

Figure 82 Oxygen Sensor Heater Circuit

Another use of PWM heater controls is to control oxygen sensor heating elements. In this system, the PCM monitors current flow through the circuit to indirectly monitor temperature, and then adjusts the PWM signal to maintain proper temperature for greater efficiency.

CARCHIPCARE
https://carchipcare.com
+91 9269969060

Notes:

CARCHIPCARE
https://carchipcare.com
+91 9269969060

Notes:

CARCHIPCARE
https://carchipcare.com
+91 9269969060

GLOSSARY

analog	Pertaining to a mechanism that represents data by measurement of a continuous physical variable, such as voltage or pressure
biasing	Within electronics, it is the method of establishing predetermined voltages and/or currents at various points of an electronic circuit to set an appropriate operating point
digital	Representing data as a series of numerical values
Hall-effect sensor	A transducer that varies its output voltage in response to a magnetic field
NPN transistor	An NPN transistor has a layer of P-type material between two layers of N-type material
piezo	A combining form meaning "pressure," used in the formation of compound words; Piezoelectric/Piezoresistive
PNP transistor	A PNP transistor has a layer of N-type semiconductor between two layers of P-type material
voltage regulation	The ability of a system to provide near constant voltage over a wide range of load conditions

CARCHIPCARE
https://carchipcare.com
+91 9269969060

Notes:

CARCHIPCARE
https://carchipcare.com
+91 9269969060

Notes:

CARCHIPCARE
https://carchipcare.com
+91 9269969060

Notes:

CARCHIPCARE
https://carchipcare.com
+91 9269969060

Notes:

CARCHIPCARE
https://carchipcare.com
+91 9269969060

Notes:

CARCHIPCARE
https://carchipcare.com
+91 9269969060